Instructions for Parts Books

The heading at the top of the page will be the same for the picture of the parts at it is for the page with the part numbers.

Definition of column headings on part number pages:

REF.No → The number refering to the part on the picture page of the parts book.

Part No. → The number assigned to this part at the time of printing the parts book.

Description → Discription of part.

Q'ty → Quanity of part used on that page.

S.No. → Serial number range of the equipment that this part will fit.
>= Your serial number should be greater than or equal to the number shown.
<= Your serial number should be lesser than or equal to the serial number shown.

I/C → Interchangeability of part shown.
←→ The part shown will work for the older and later serial number.
The part shown is not interchangable with the other serial number.
← new for old
→ old for new

Remarks → Notes about this particulart part. Sometimes this may say except [FR] or [CA]

Note about Country Codes:

The parts books we use in the United States of America may also contain information about a part that would be different in another country. It is important that you are aware of the country codes in some instances.

Symbol	Country
A	United States of America
CA	Canada
FR	France
GR	Greece
PO	Portugal
AU	Australia

If the remarks column says for example EXCEPT [FR] this part works in all countries except France.
That means it will work here in the USA.

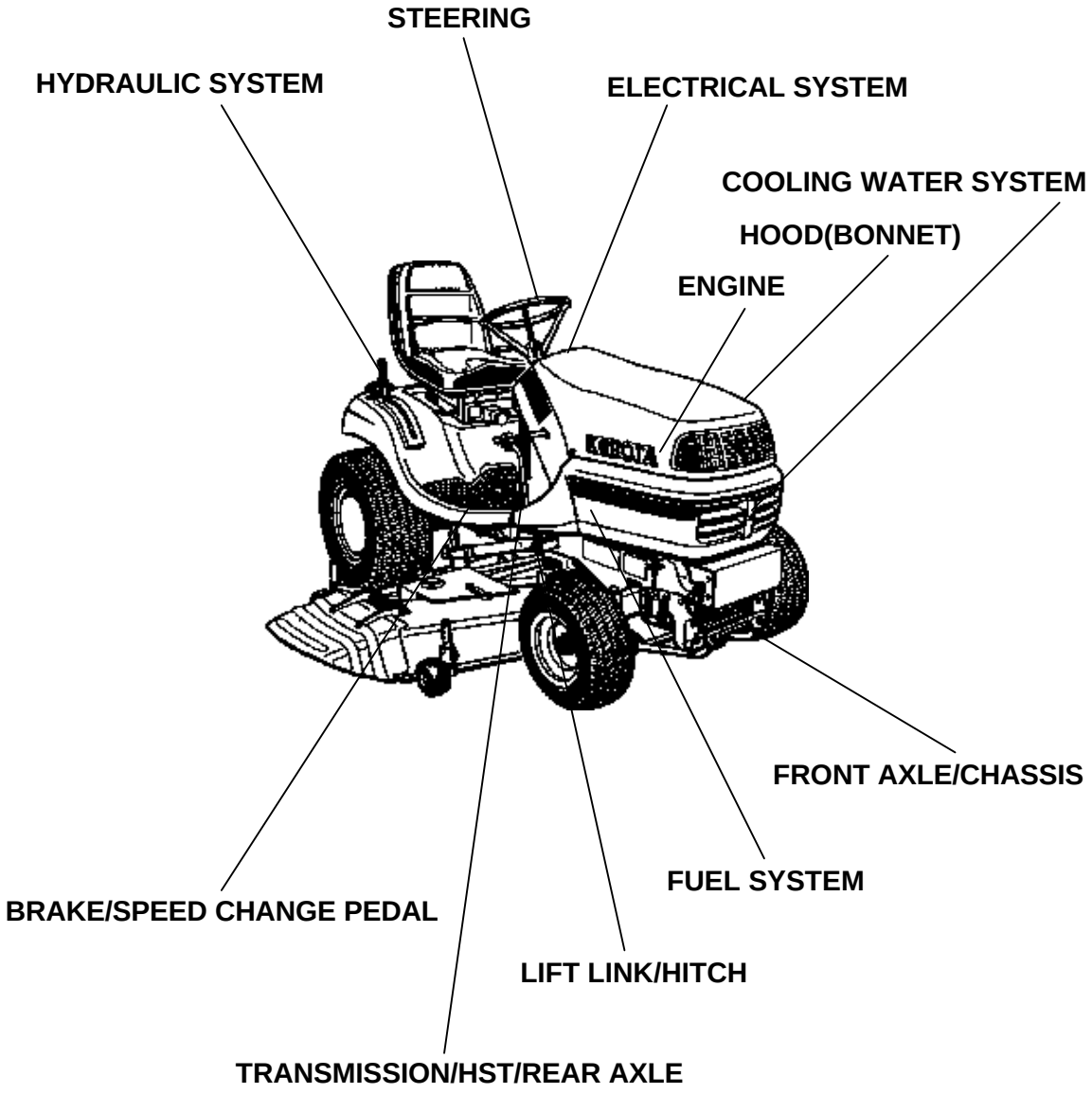

LABELS

ACCESSORIES

Item	Part No.	Description	Book
ENGINE	011001	CRANK CASE	100K0658
	011002	OIL PAN	100K0658
	011003	CYLINDER HEAD	100K0658
	011004	GEAR CASE	100K0658
	011005	HEAD COVER	100K0658
	011006	OIL FILTER	100K0658
	011007	DIPSTICK AND GUIDE	100K0658
	011008	OIL PUMP	100K0658
	011100	MAIN BEARING CASE	100K0658
	011101	CAMSHAFT AND IDLE GEAR SHAFT	100K0658
	011102	PISTON AND CRANKSHAFT	100K0658
	011103	FLYWHEEL	100K0658
	011105	FUEL CAMSHAFT	100K0658
	011200	GOVERNOR	100K0658
	011202	CABURETTOR	100K0658
	011204	FORK LEVER	100K0658
	011205	SPEED CONTROL LEVER	100K0658
	011300	SPARK PLUG AND DISTRIBUTOR	100K0658
	011301	DISTRIBUTOR (COMPONENT PARTS)	100K0658
	011402	ALTERNATOR AND PULLEY	100K0658
	011403	ALTERNATOR (COMPONENT PARTS)	100K0658
	011404	STARTER	100K0658
	011405	STARTER (COMPONENT PARTS)	100K0658
	011406	OIL SWITCH/THERMOMETER AND PLUG	100K0658
	011500	WATER FLANGE AND THERMOSTAT	100K0658
	011501	WATER PUMP	100K0658
	01150101	WATER PUMP	100K0658
	011503	WATER PIPE	100K0658
	011504	FAN	100K0658
	011600	VALVE AND ROCKER ARM	100K0658
	011601	INLET MANIFOLD	100K0658
	011602	EXHAUST MANIFOLD	100K0658
	011905	GASKET KIT	100K0658
	021603	AIR CLEANER	100K0658
	021605	MUFFLER	100K0658
FUEL SYSTEM	02A010	ACCELERATOR LEVER	100K0658
	02A015	CHOKE WIRE	100K0658
	02A100	FUEL TANK	100K0658
	02A120	FUEL PIPE/FUEL FILTER	100K0658
COOLING WATER SYSTEM	02A210	WATER PIPE	100K0658
	02A220	RADIATOR	100K0658
ELECTRICAL SYSTEM	02B010	BATTERY	100K0658
	02B100	ELECTRICAL PARTS	100K0658
	02B200	HEAD LIGHT	100K0658
	02B500	ELECTRICAL WIRING	100K0658
TRANSMISSION/HST/REAR AXLE	02C100	TRANSMISSION CASE	100K0658
	02C120	BRAKE GEAR-SHAFT/IDLER SHAFT	100K0658
	02C400	HST	100K0658
	02C405	HST [COMPONENT PARTS]	100K0658
	02C420	UNIVERSAL JOINT/HST FAN	100K0658
	02C600	PTO SHAFT	100K0658
	02C620	PTO TENSION PULLEY	100K0658
	02C800	REAR DIFFERENTIAL	100K0658
	02C810	REAR DIFFERENTIAL SHAFT	100K0658
	02D010	REAR AXLE CASE	100K0658
	02D100	REAR AXLE	100K0658
	02D200	REAR WHEEL	100K0658
BRAKE/SPEED CHANGE PEDAL	02D500	PTO BRAKE	100K0658
	02D510	BRAKE	100K0658

Item	Part No.	Description	Book
BRAKE/SPEED CHANGE PEDAL	02D520	BRAKE PEDAL	100K0658
	02D525	PARKING BRAKE LEVER	100K0658
	02D530	BRAKE ROD	100K0658
	02D700	SPEED CHANGE PEDAL	100K0658
	02D710	SPEED CONTROL ARM	100K0658
	02D720	HYDRAULIC CONTROL LEVER	100K0658
	02D730	PTO CLUTCH CONTROL LEVER/WIRE	100K0658
	02D740	PTO WIRE BRACKET	100K0658
FRONT AXLE/CHASSIS	02E010	FRONT AXLE	100K0658
	02E100	FRONT WHEEL	100K0658
	02E500	MAIN FRAME/STEERING SUPPORT	100K0658
	02E550	ENGINE SUPPORT	100K0658
STEERING	02E700	POWER STEERING/STEERING HANDLE	100K0658
HYDRAULIC SYSTEM	02F010	CONTROL VALVE	100K0658
	02F015	CONTROL VALVE [COMPONENT PARTS]	100K0658
	02F01501	CONTROL VALVE [COMPONENT PARTS]	100K0658
	02F100	HYDRAULIC OIL LINE (SUCTION)	100K0658
	02F130	HYDRAULIC OIL LINE(BREATHER)	100K0658
	02F150	HYDRAULIC OIL LINE(DRAIN)	100K0658
	02F300	HYDRAULIC LIFT CYLINDER	100K0658
LIFT LINK/HITCH	02F350	LIFT LINK	100K0658
	02F360	HITCH	100K0658
HOOD(BONNET)	02G001	HOOD(BONNET)	100K0658
	02G010	PANEL	100K0658
	02G030	FENDER	100K0658
	02G040	SEAT	100K0658
	02G045	SEAT SUSPENSION	100K0658
LABELS	02G100	LABEL	100K0658
ACCESSORIES	02P001	ACCESSORIES AND SERVICE PARTS	100K0658

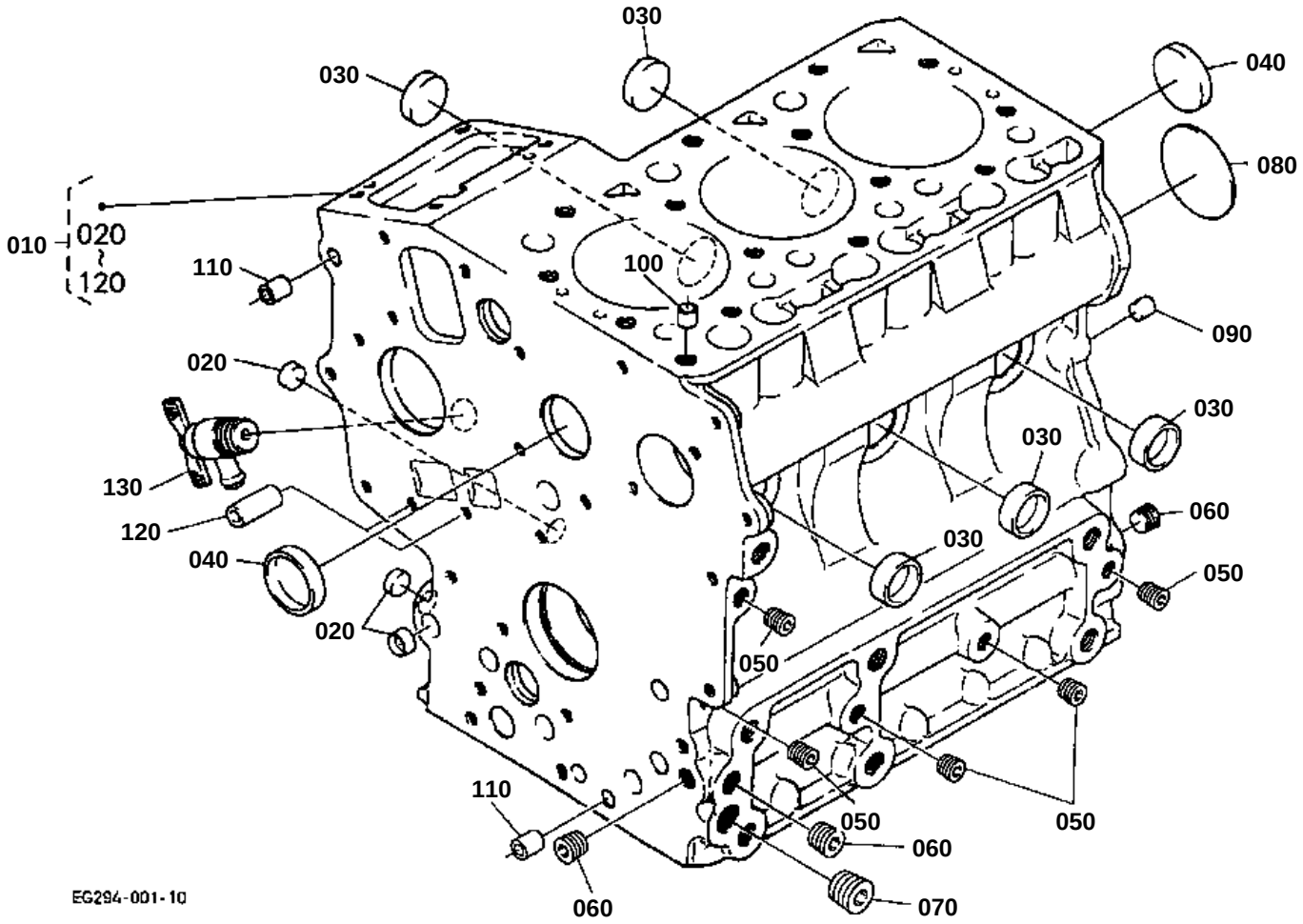
030
030
040
080
010
020
120
110
100
090
020
030
030
130
120
060
040
030
050
020
050
110
050
050
060
060
070
EG294-001-10

CRANK CASE

↔ Interchangeable; ≠ not interchangeable; ← new for old; → old for new

REF.No	Part No.	Description	Q'ty	S.No.	I/C	REMARKS	Weight (kgf)	Weight (lb)
010	12691-01013	ASSY CRANKCASE	1				18	39.6
020	16851-96260	CAP SEALING	3				0.005	0.011
030	16851-96270	CAP SEALING	5				0.005	0.011
040	15451-96270	CAP SEALING	2				0.012	0.0264
050	15261-96010	PLUG	5				0.002	0.0044
060	15521-96020	PLUG	3				0.003	0.0066
070	15521-96030	PLUG	1				0.007	0.0154
080	15261-96160	PLUG EXPANSION	1				0.02	0.044
090	05012-00814	PIN STRAIGHT	2				0.006	0.0132
100	15221-33650	PIN PIPE	1				0.004	0.0088
110	15231-33960	PIN PIPE	2				0.001	0.0022
120	17331-59190	PIN PIPE	2				0.02	0.044
130	15841-73020	ASSY COCK DRAIN	1				0.03	0.066

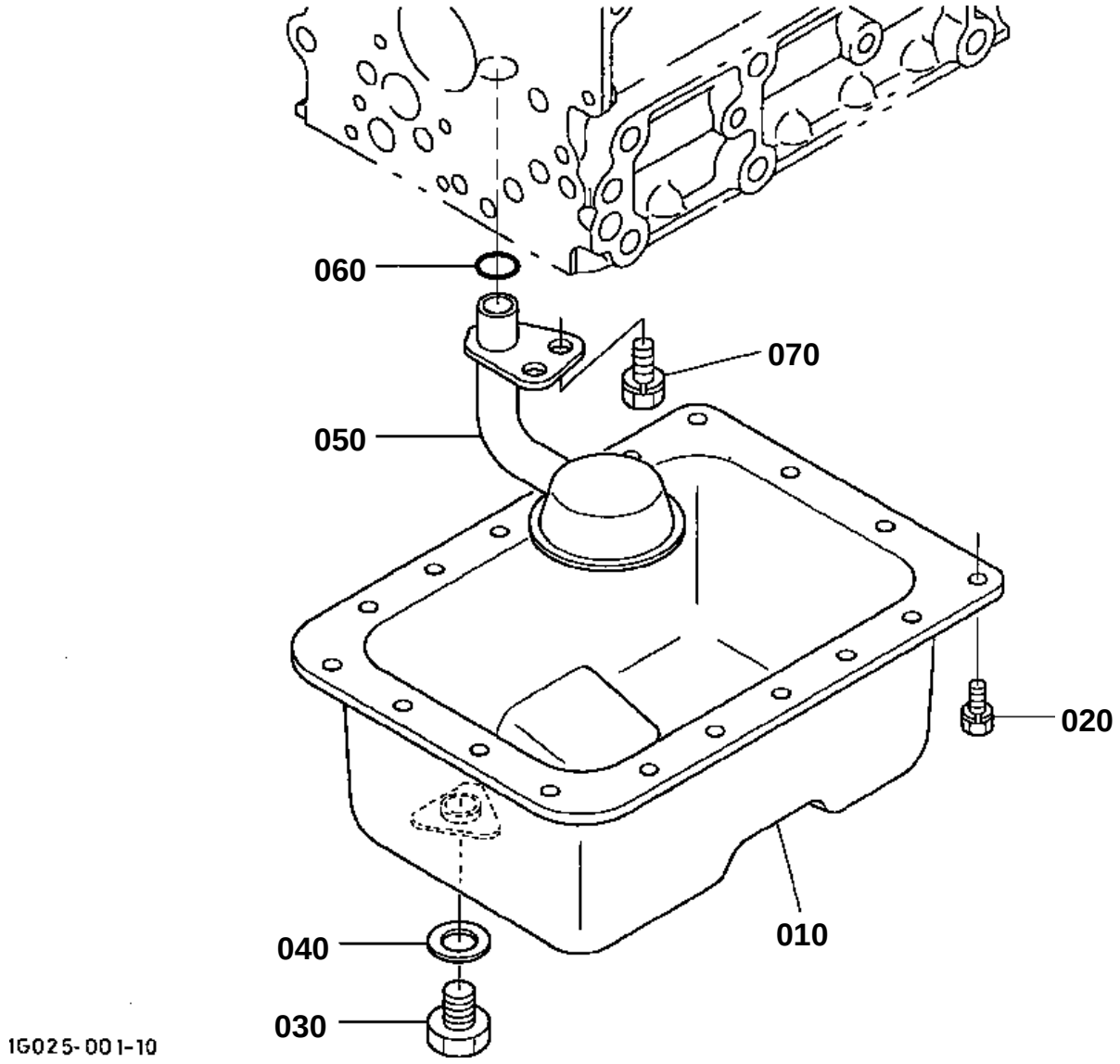
060
070
050
020
010
040
030
1G025-001-10

OIL PAN

↔ Interchangeable; ≠ not interchangeable; ← new for old; → old for new

REF.No	Part No.	Description	Q'ty	S.No.	I/C	REMARKS	Weight (kgf)	Weight (lb)
010	1G025-01500	COMP.OIL PAN	1				0.78	1.716
020	01023-50612	BOLT	18				0.005	0.011
030	15221-33750	PLUG	1				0.032	0.0704
040	6C090-58960	GASKET	1				0.002	0.0044
050	16813-32110	FILTER OIL	1				0.11	0.242
060	04814-00160	O RING	1				0.001	0.0022
070	01123-60814	BOLT	1				0.01	0.022

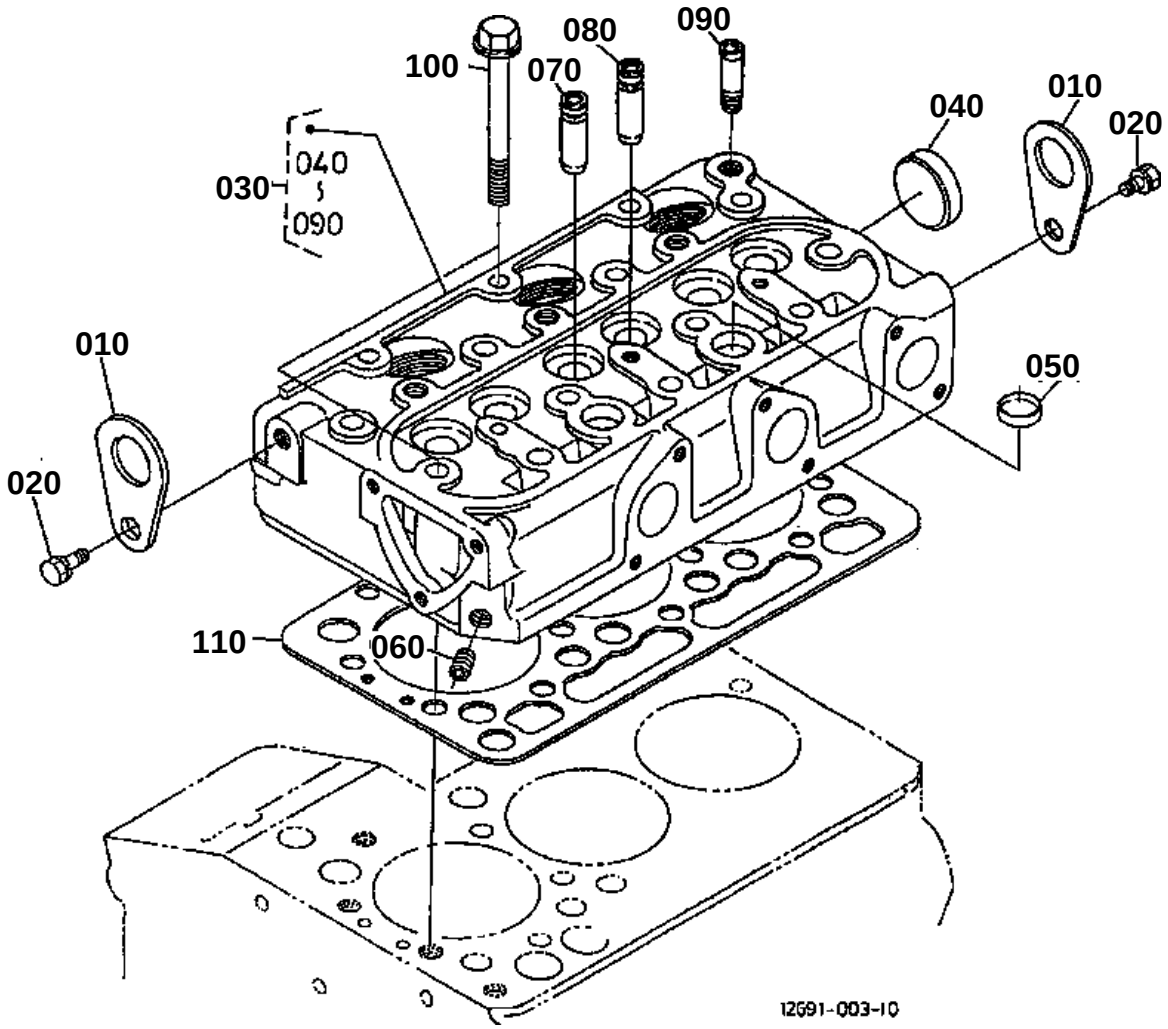
100
070
080
090
040
010
020
030
040
090
010
050
020
110
060
12G91-003-10

CYLINDER HEAD

↔ Interchangeable; ≠ not interchangeable; ← new for old; → old for new

REF.No	Part No.	Description	Q'ty	S.No.	I/C	REMARKS	Weight (kgf)	Weight (lb)
010	15221-01750	HOOK ENGINE	2				0.04	0.088
020	01123-60816	BOLT	2				0.01	0.022
030	12691-03040	COMP.CYLINDER HEAD	1	<=YY8644			7	15.4
030	EG601-03040	COMP.CYLINDER HEAD	1	>=1A0001	≠		7.2	15.84
040	15321-96260	CAP SEALING	1				0.014	0.0308
050	15261-03370	CAP SEALING	2				0.005	0.011
060	15261-96010	PLUG	1				0.002	0.0044
070	15841-13540	GUIDE INLET VALVE	3				0.014	0.0308
080	15841-13560	GUIDE EXHAUST VALVE	3				0.014	0.0308
090	15841-96020	PLUG	1				0.028	0.0616
100	14601-03450	BOLT CYLINDER HEAD	14				0.035	0.077
110	12691-03310	GASKET CYLINDER HEAD	1				0.04	0.088

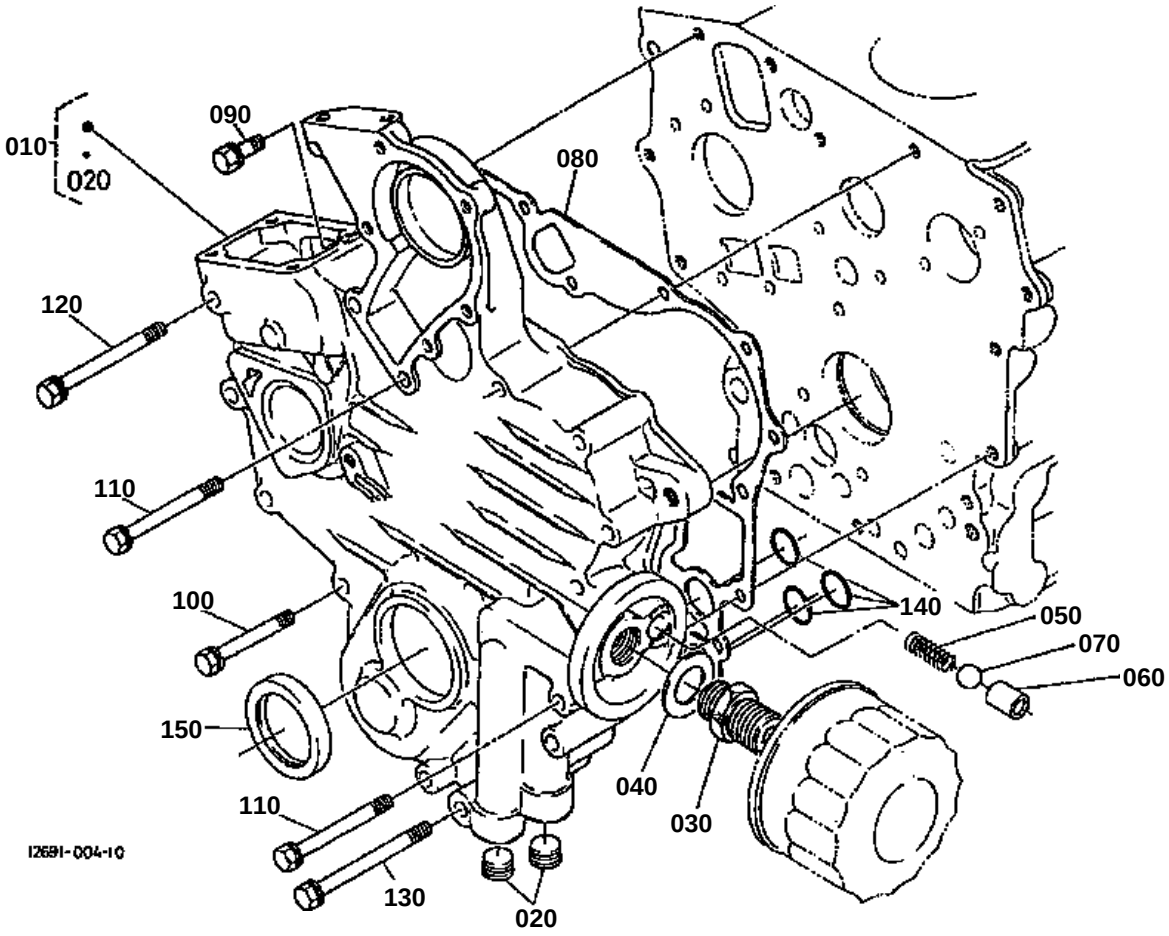
010
020
090
080
120
110
100
150
110
130
020
040
030
140
050
070
060
12691-004-10

GEAR CASE

↔ Interchangeable; ≠ not interchangeable; ← new for old; → old for new

REF.No	Part No.	Description	Q'ty	S.No.	I/C	REMARKS	Weight (kgf)	Weight (lb)
010	12691-04020	COMP.CASE GEAR	1				1.7	3.74
020	16851-96010	PLUG	2				0.015	0.033
030	15241-32290	JOINT PIPE	1				0.053	0.1166
040	15841-94010	WASHER PLAIN	1				0.003	0.0066
050	16851-36950	SPRING	1				0.02	0.044
060	15841-36930	SEAT VALVE	1				0.01	0.022
070	07715-03211	BALL	1				0.003	0.0066
080	15862-04132	GASKET GEAR CASE NA	1				0.007	0.0154
090	01023-50618	BOLT	1				0.006	0.0132
100	01023-60650	BOLT	8				0.015	0.033
110	15841-91010	BOLT	5				0.014	0.0308
120	01023-60670	BOLT	1				0.015	0.033
130	01023-50675	BOLT	1				0.01	0.022
140	04814-06130	O RING	3				0.01	0.022
150	15877-04140	SEAL OIL	1				0.011	0.0242

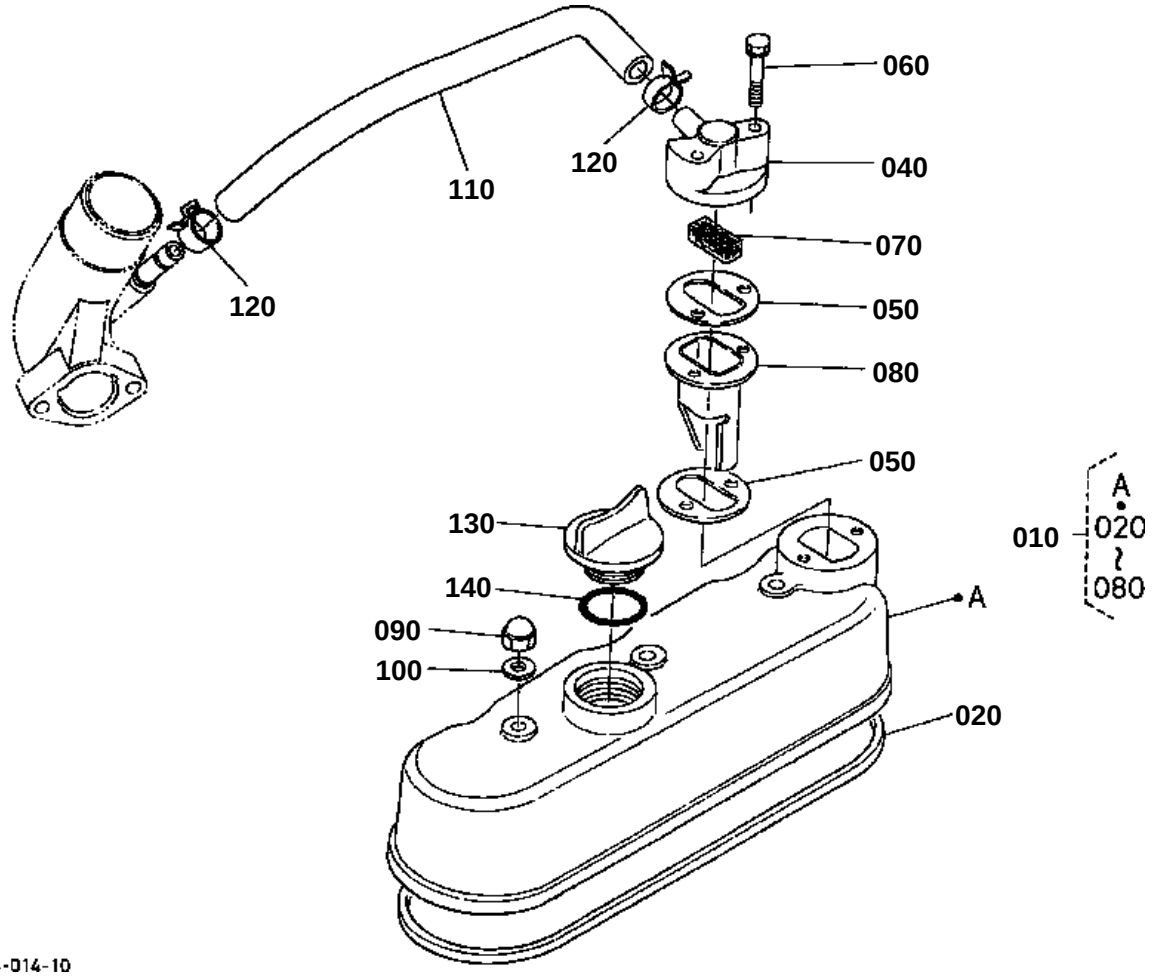
060
040
120
110
070
120
050
080
050
130
010
A
020
~
080
140
A
090
100
020
EG294-014-10

HEAD COVER

↔ Interchangeable; ≠ not interchangeable; ← new for old; → old for new

REF.No	Part No.	Description	Q'ty	S.No.	I/C	REMARKS	Weight (kgf)	Weight (lb)
010	EG261-14500	ASSY COVER CYL.HEAD	1				0.43	0.946
020	16861-14522	GASKET HEAD COVER	1				0.02	0.044
030	99999-99999	BLANK	0				0	0
040	EG261-05420	COVER BREATHER	1				0.047	0.1034
050	17524-05130	GASKET	2				0.001	0.0022
060	01023-50635	BOLT	2				0.01	0.022
070	15841-05670	ELEMENT BREATHER	1				0.01	0.022
080	17472-14490	PLATE BREATHER	1				0.015	0.033
090	15841-14620	NUT	3				0.01	0.022
100	15601-96650	GASKET	3				0.001	0.0022
110	EG261-05512	TUBE BREATHER	1				0.04	0.088
120	16241-73360	BAND PIPE	2				0.003	0.0066
130	E9151-33140	PLUG OIL FILLER	1				0.017	0.0374
140	04814-50300	O RING	1				0.001	0.0022

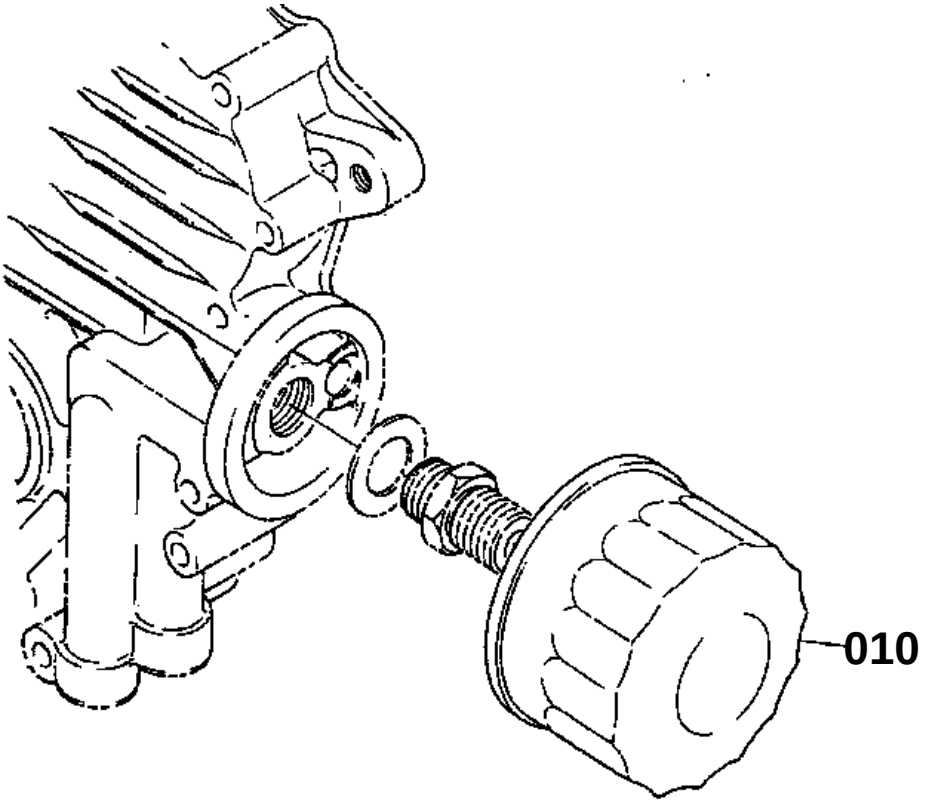

12691-006-10

↔ Interchangeable; ≠ not interchangeable; ← new for old; → old for new

REF.No	Part No.	Description	Q'ty	S.No.	I/C	REMARKS	Weight (kgf)	Weight (lb)
010	15853-32430	CARTRIDGE OIL FILTER	1				0.195	0.429

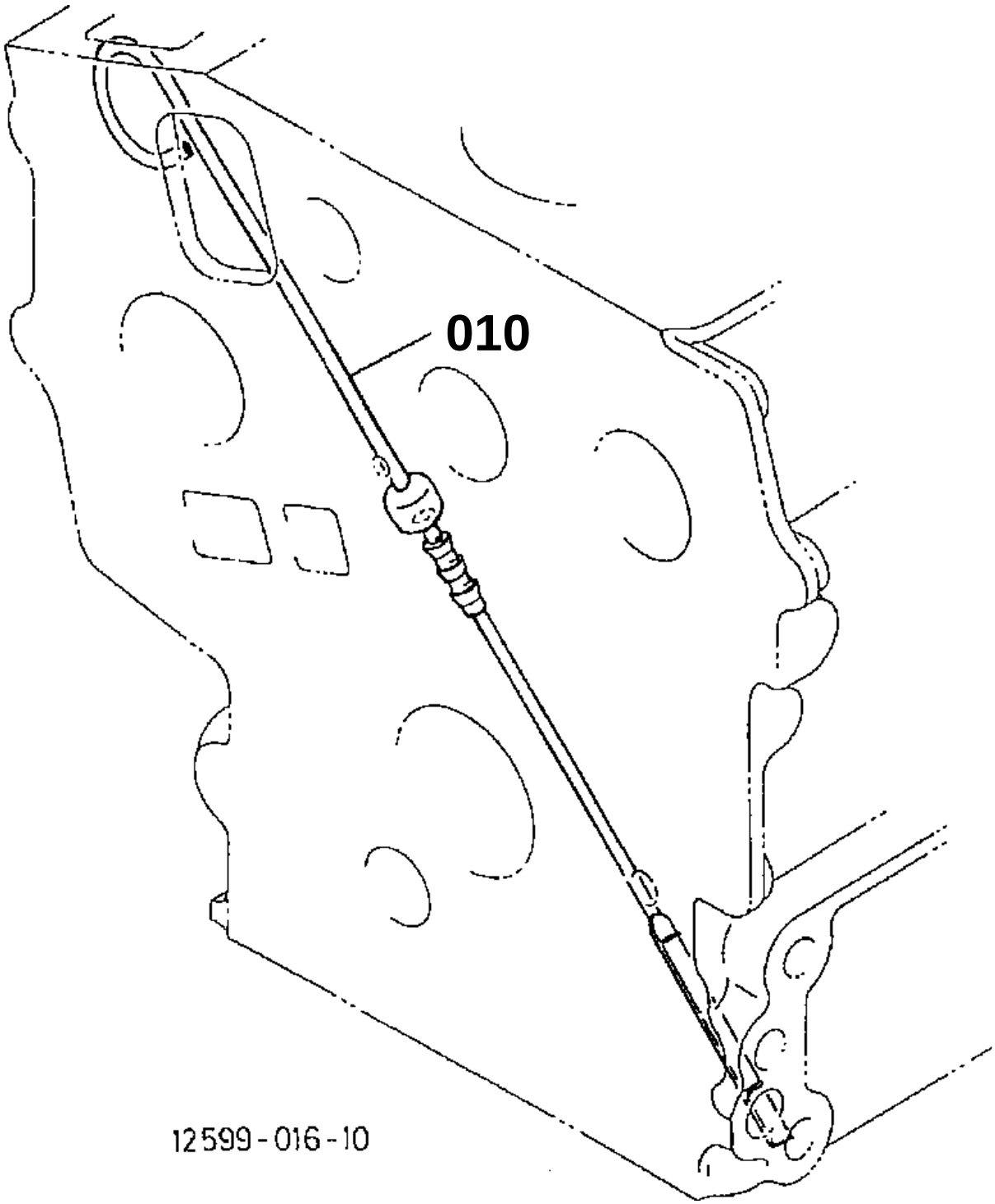
010
12599-016-10

↔ Interchangeable; ≠ not interchangeable; ← new for old; → old for new

REF.No	Part No.	Description	Q'ty	S.No.	I/C	REMARKS	Weight (kgf)	Weight (lb)
010	16851-36410	GAUGE OIL	1				0.03	0.066

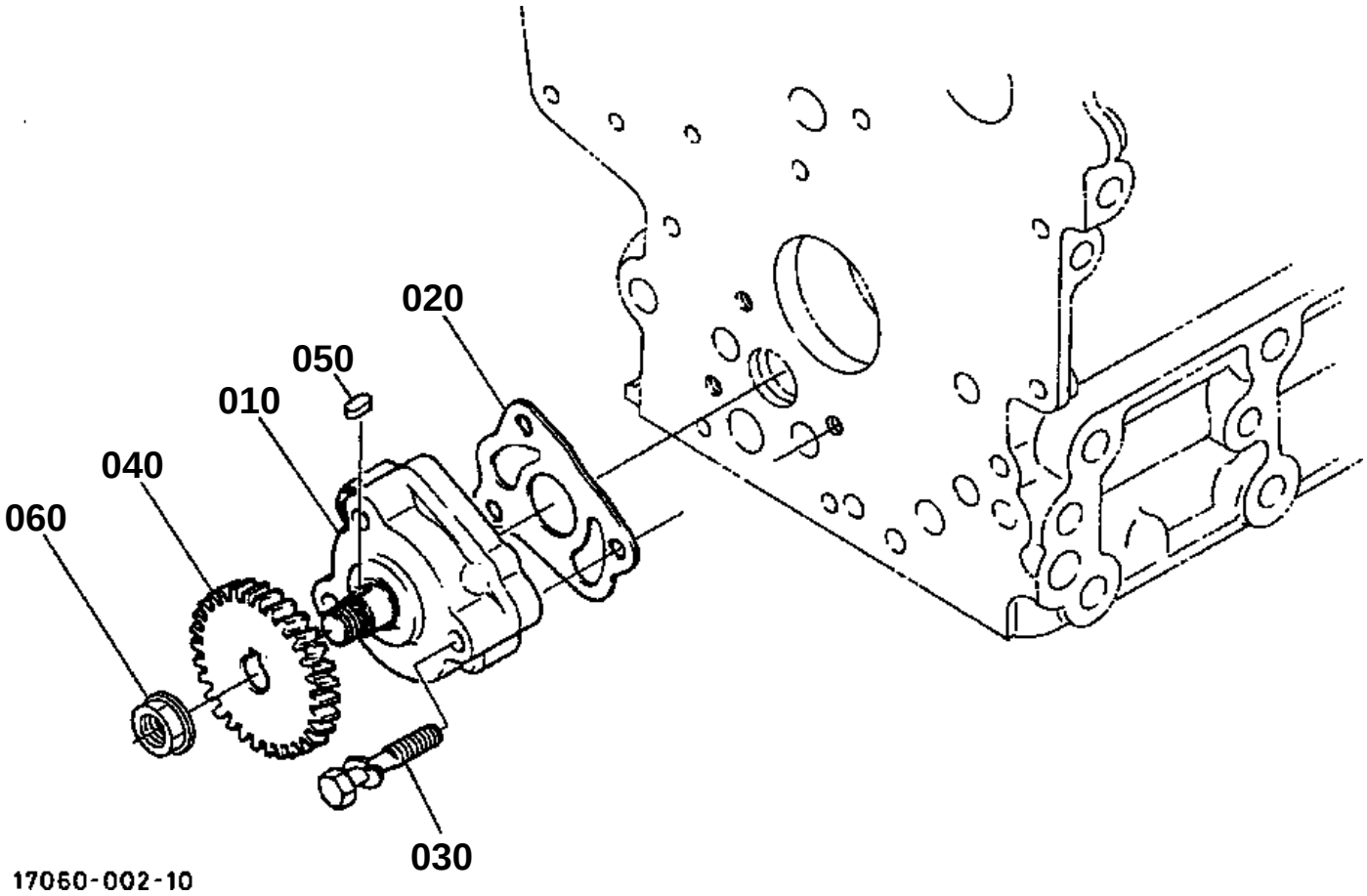
020
050
010
040
060
030
17060-002-10

OIL PUMP

↔ Interchangeable; ≠ not interchangeable; ← new for old; → old for new

REF.No	Part No.	Description	Q'ty	S.No.	I/C	REMARKS	Weight (kgf)	Weight (lb)
010	16851-35012	ASSY PUMP OIL	1				0.24	0.528
020	16851-35152	GASKET OIL PUMP NA	1				0.001	0.0022
030	15841-91050	BOLT	3				0.01	0.022
040	15841-35660	GEAR OIL PUMP DRIVE	1				0.113	0.2486
050	05712-00408	KEY FEATHER	1				0.001	0.0022
060	02783-50100	NUT FLANGE	1				0.01	0.022

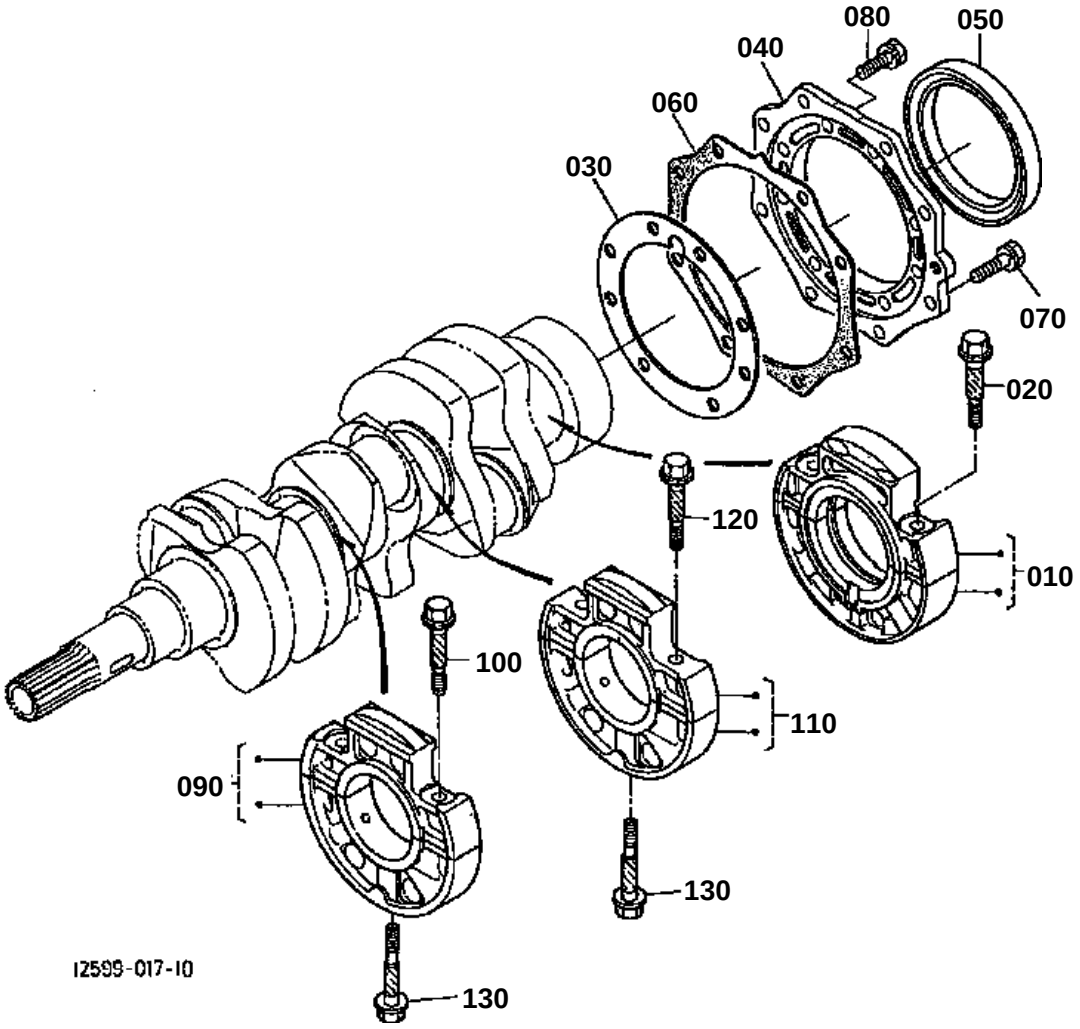
080
050
040
060
030
070
020
120
010
100
110
090
130
130
12599-017-10

MAIN BEARING CASE

↔ Interchangeable; ≠ not interchangeable; ← new for old; → old for new

REF.No	Part No.	Description	Q'ty	S.No.	I/C	REMARKS	Weight (kgf)	Weight (lb)
010	15841-04090	ASSY CASE MAIN BRG.	1				0.71	1.562
020	15841-04540	BOLT BEARING CASE	2				0.012	0.0264
030	15852-04360	GASKET BEARING CASE	1				0.005	0.011
040	15841-04810	COVER BEARING CASE	1				0.16	0.352
050	EG283-04460	SEAL OIL	1				0.03	0.066
060	15841-04822	GASKET	1				0.004	0.0088
070	01023-50620	BOLT	8				0.006	0.0132
080	01023-50622	BOLT	8				0.005	0.011
090	16851-04040	ASSY CASE MAIN BRG.	1				0.58	1.276
100	15841-04540	BOLT BEARING CASE	2				0.012	0.0264
110	16861-04050	ASSY CASE MAIN BRG.	1				0.58	1.276
120	15841-04540	BOLT BEARING CASE	2				0.012	0.0264
130	15841-04562	BOLT BEARING CASE	2				0.02	0.044

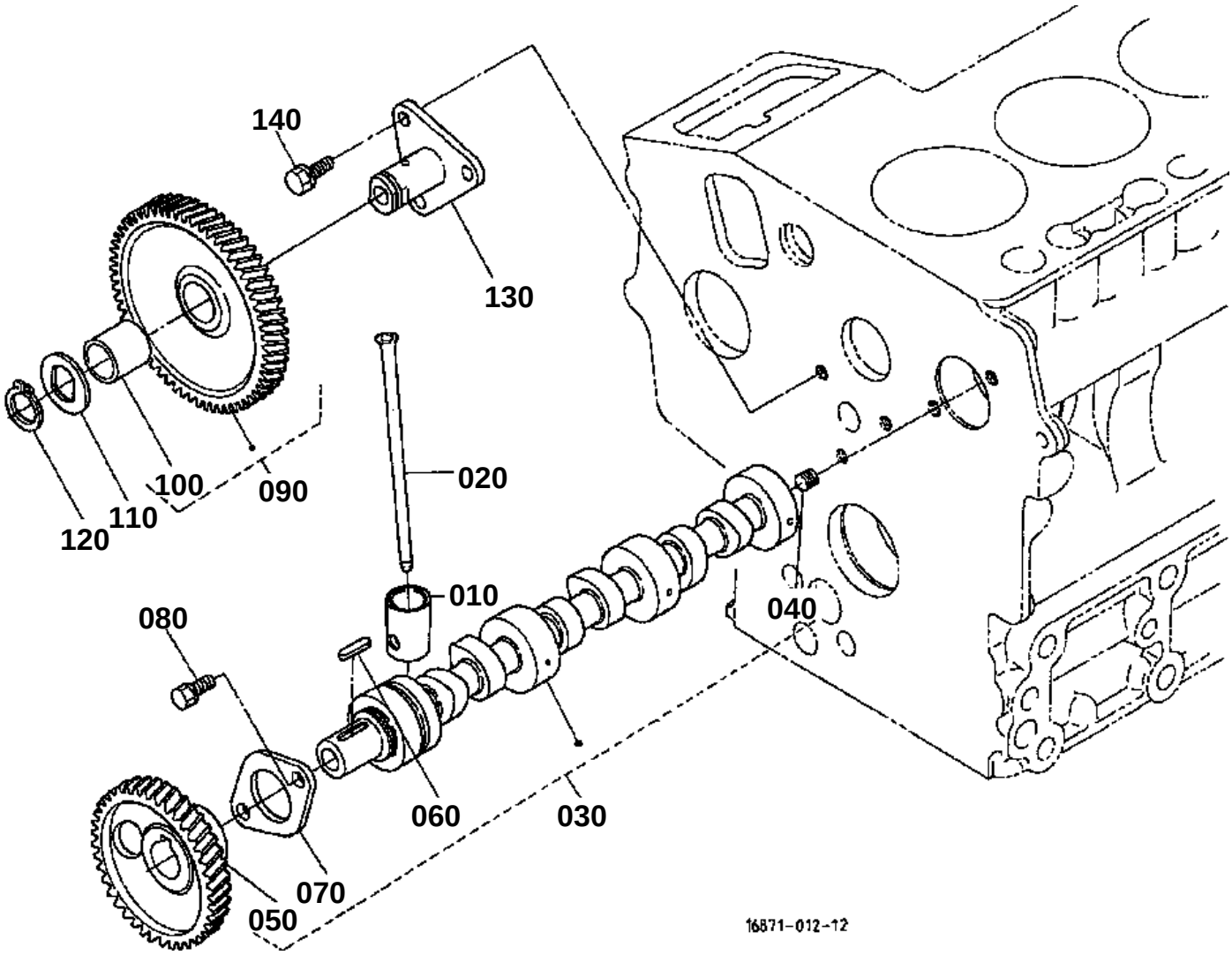
140
130
020
100
090
110
120
010
080
040
060
030
070
050
16871-012-12

CAMSHAFT AND IDLE GEAR SHAFT

↔ Interchangeable; ≠ not interchangeable; ← new for old; → old for new

REF.No	Part No.	Description	Q'ty	S.No.	I/C	REMARKS	Weight (kgf)	Weight (lb)
010	16851-15550	TAPPET	6				0.025	0.055
020	16851-15110	PUSH ROD	6				0.02	0.044
030	15861-16010	ASSY CAMSHAFT	1				0.9	1.98
040	15521-93610	SCREW SET	1				0.002	0.0044
050	15841-16510	GEAR CAMSHAFT	1				0.27	0.594
060	05712-00518	KEY FEATHER	1				0.003	0.0066
070	15841-16270	STOPPER CAMSHAFT	1				0.027	0.0594
080	01023-50612	BOLT	2				0.005	0.011
090	15875-24013	COMP.GEAR IDLE	1				0.38	0.836
100	15875-24282	BUSH	1				0.01	0.022
110	15875-24370	COLLAR IDLE GEAR	1				0.006	0.0132
120	15875-24320	RING SNAP	1				0.003	0.0066
130	15875-24250	SHAFT IDLE GEAR	1				0.13	0.286
140	01023-50614	BOLT	3				0.005	0.011

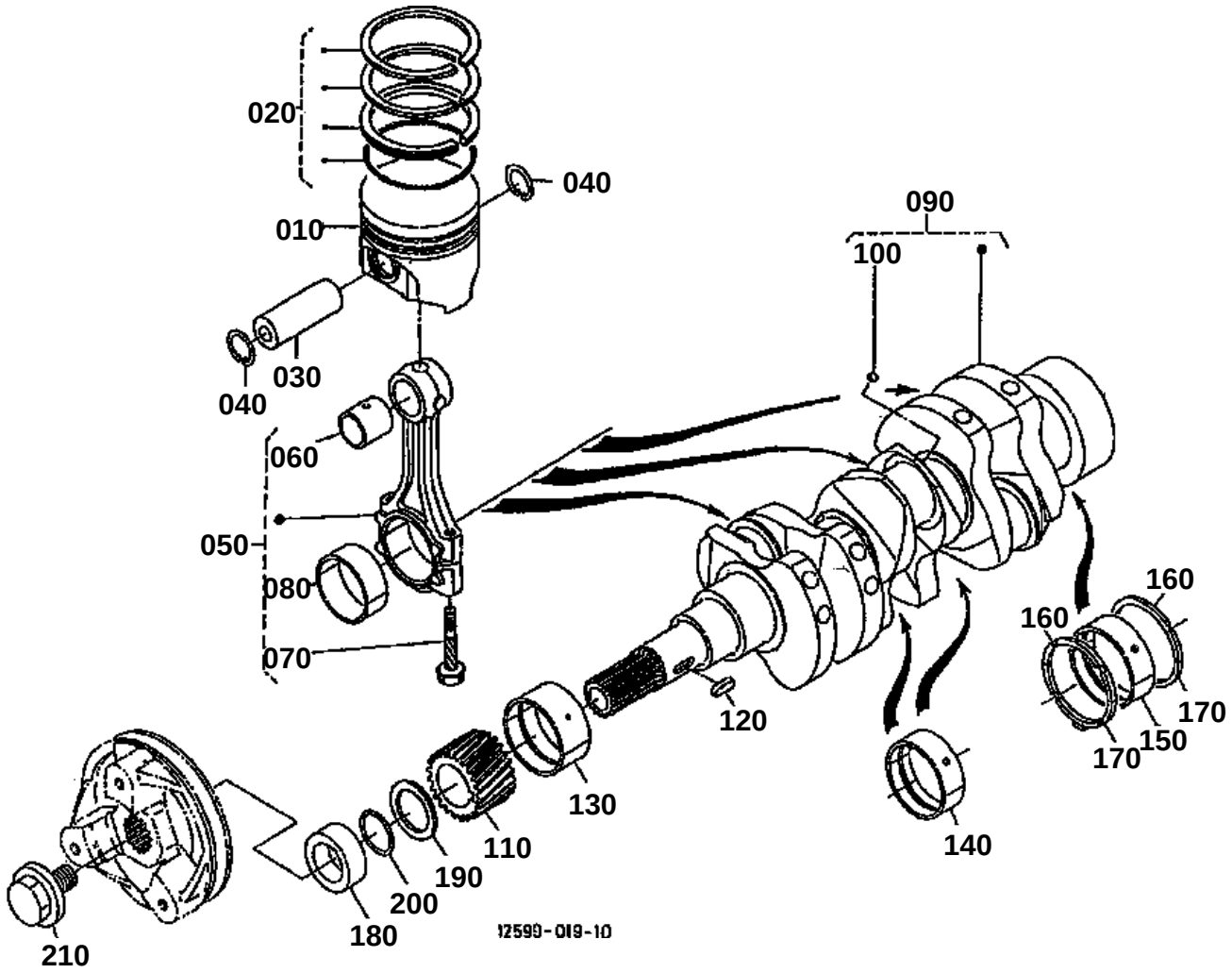
020
040
010
090
100
030
040
060
050
080
070
160
160
170
150
170
120
130
140
110
190
200
180
210
12599-019-10

↔ Interchangeable; ≠ not interchangeable; ← new for old; → old for new

REF.No	Part No.	Description	Q'ty	S.No.	I/C	REMARKS	Weight (kgf)	Weight (lb)
010	12691-21110	PISTON	3	<=YY8644		STD	0.28	0.616
010	EG601-21110	PISTON	3	>=1A0001	≠	STD	0.16	0.352
010	12691-21910	PISTON	3	<=YY8644		+0.5mm	0.2	0.44
010	EG601-21910	PISTON	3	>=1A0001	≠	+0.5mm	0.17	0.374
020	12691-21053	ASSY PISTON RING	3			STD	0.03	0.066
020	12691-21093	ASSY PISTON RING	3			+0.5mm	0.03	0.066
030	12581-21310	PIN PISTON	3				0.05	0.11
040	14601-21330	CIR CLIP PISTON PIN	6				0.002	0.0044
050	15861-22010	ASSY CONNECTING ROD	3				0.35	0.77
060	15841-21980	BUSH PISTON PIN	3				0.01	0.022
070	16851-22140	BOLT CONNECTING ROD	6				0.012	0.0264
080	15861-22310	METAL CRANKPIN	3			STD SET	0.02	0.044
080	15861-22970	METAL CRANKPIN	3			-0.2mm SET	0.03	0.066
080	15861-22980	METAL CRANKPIN	3			-0.4mm SET	0.03	0.066
090	16861-23010	COMP.CRANKSHAFT	1				5.56	12.232
100	07715-03207	BALL	3				0.001	0.0022
110	15841-24110	GEAR CRANK	1				0.14	0.308
120	05712-00515	KEY FEATHER	1				0.003	0.0066
130	15861-23470	METAL CRANKSHAFT	1			STD	0.03	0.066
130	15861-23910	METAL CRANKSHAFT	1			-0.2mm	0.04	0.088
130	15861-23920	METAL CRANKSHAFT	1			-0.4mm	0.04	0.088
140	15861-23480	METAL CRANKSHAFT	2			STD SET	0.01	0.022
140	15861-23860	METAL CRANKSHAFT	2			-0.2mm SET	0.03	0.066
140	15861-23870	METAL CRANKSHAFT	2			-0.4mm SET	0.03	0.066
150	15694-23480	METAL CRANKSHAFT	1			STD SET	0.04	0.088
150	15694-23930	METAL CRANKSHAFT	1			-0.2mm SET	0.05	0.11
150	15694-23940	METAL CRANKSHAFT	1			-0.4mm SET	0.046	0.1012
160	15261-23530	METAL SIDE	2			STD	0.006	0.0132
160	15261-23950	METAL SIDE	2			+0.2mm	0.006	0.0132
160	15261-23960	METAL SIDE	2			+0.4mm	0.007	0.0154
170	15261-23540	METAL SIDE	2			STD	0.007	0.0154
170	15261-23970	METAL SIDE	2			+0.2mm	0.006	0.0132
170	15261-23980	METAL SIDE	2			+0.4mm	0.007	0.0154
180	15841-23250	COLLAR CRANKSHAFT	1				0.05	0.11
190	15881-23310	SLINGER OIL	1				0.004	0.0088
200	04814-16220	O RING	1				0.001	0.0022

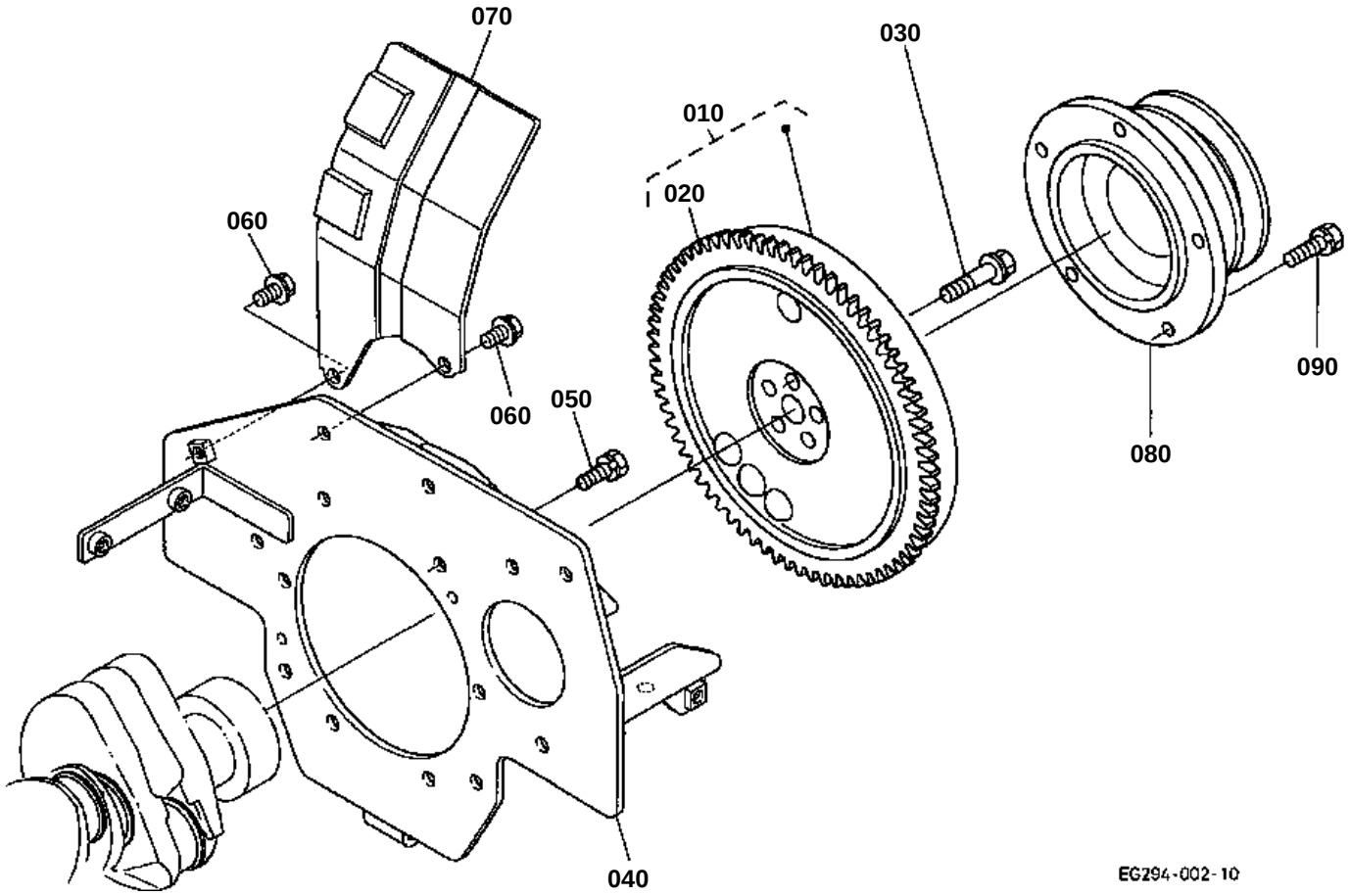
070
030
010
020
060
060
050
090
080
040
EG294-002-10

FLYWHEEL

↔ Interchangeable; ≠ not interchangeable; ← new for old; → old for new

REF.No	Part No.	Description	Q'ty	S.No.	I/C	REMARKS	Weight (kgf)	Weight (lb)
010	16861-25014	COMP.FLYWHEEL	1				6	13.2
020	16851-63822	GEAR RING	1				0.57	1.254
030	15852-25160	BOLT FLYWHEEL	5				0.025	0.055
040	EG294-04620	COMP.PLATE REAR END	1				2.3	5.06
050	01123-60816	BOLT	9				0.01	0.022
060	01754-50814	BOLT FLANGE	2				0.005	0.011
070	EG294-45480	COVER CABURETTOR	1				0.25	0.55
080	66101-58060	PULLEY DRIVE	1				2.34	5.148
090	01123-50822	BOLT	5				0.012	0.0264

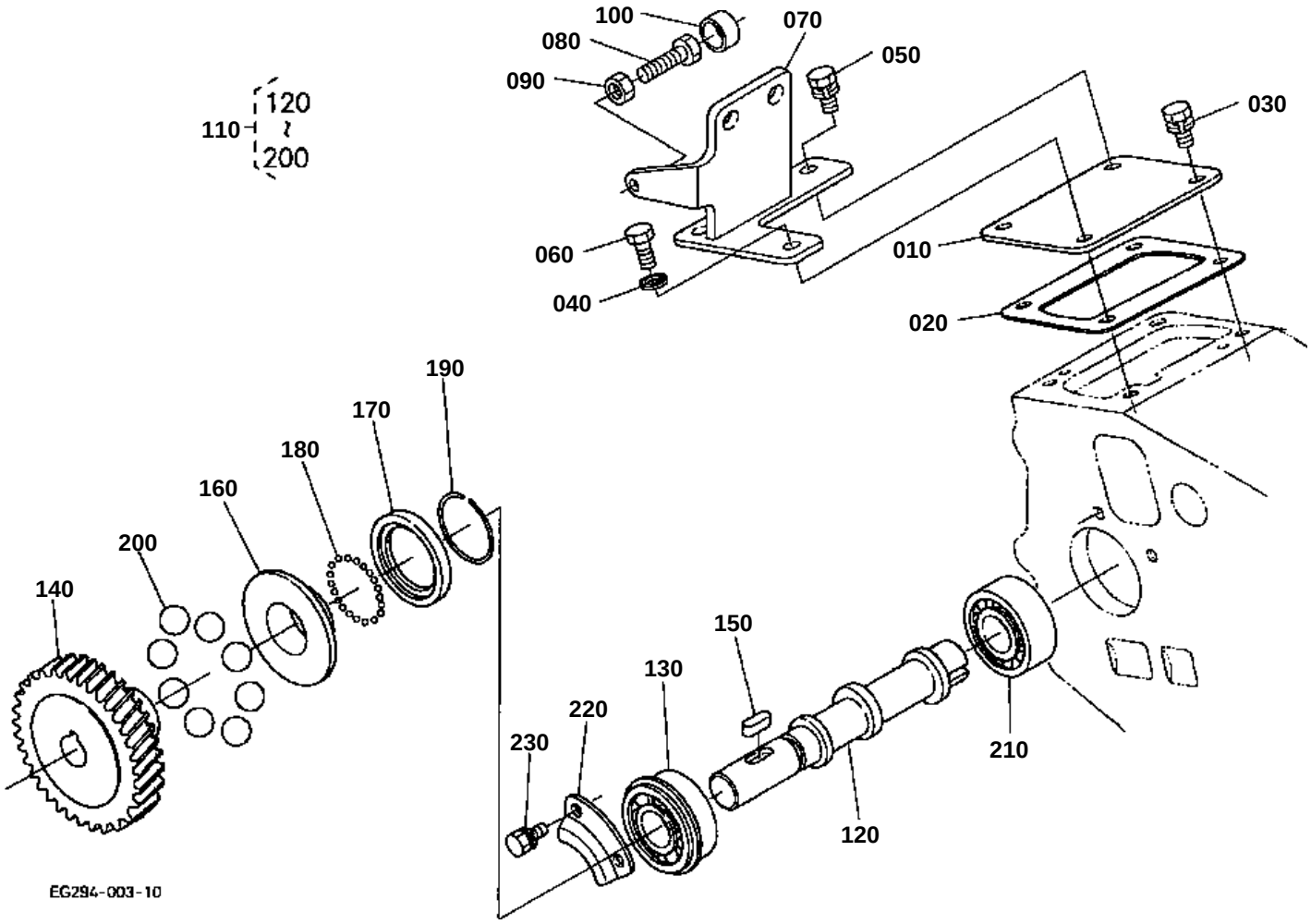
100
070
080
050
090
120
110
200
030
060
010
040
020
190
170
180
160
200
140
150
130
220
230
210
120
EG294-003-10

FUEL CAMSHAFT

↔ Interchangeable; ≠ not interchangeable; ← new for old; → old for new

REF.No	Part No.	Description	Q'ty	S.No.	I/C	REMARKS	Weight (kgf)	Weight (lb)
010	12581-51650	COVER	1				0.185	0.407
020	EG281-51660	GASKET	1				0.002	0.0044
030	01053-50616	BOLT	1				0.005	0.011
040	15601-96650	GASKET	1				0.001	0.0022
050	01023-50618	BOLT	2				0.006	0.0132
060	01053-50618	BOLT	1				0.006	0.0132
070	EG294-11550	STAY AIR CLEANER	1				0.265	0.583
080	01055-50635	BOLT	1				0.003	0.0066
090	02014-50060	NUT	1				0.002	0.0044
100	16241-54420	CAP	1				0.004	0.0088
110	12584-16030	ASSY SHAFT DISTRIBU	1				0.746	1.6412
120	12584-16180	SHAFT DISTRIBUTOR	1				0.2	0.44
130	08153-06203	BEARING BALL	1				0.08	0.176
140	15841-51150	GEAR INJECTION PUMP	1				0.315	0.693
150	05712-00515	KEY FEATHER	1				0.003	0.0066
160	15841-55450	SLEEVE GOVERNOR	1				0.05	0.11
170	15841-55690	CASE GOVERNOR BALL	1				0.02	0.044
180	07715-00801	BALL	32				0.001	0.0022
190	15261-55470	CIR-CLIP GOV. SLEEVE	1				0.002	0.0044
200	07715-03217	BALL	8				0.01	0.022
210	08103-06203	BEARING BALL	1				0.065	0.143
220	15841-16320	STOPPER FUEL.C/SHAFT	1				0.015	0.033
230	01023-50612	BOLT	2				0.005	0.011

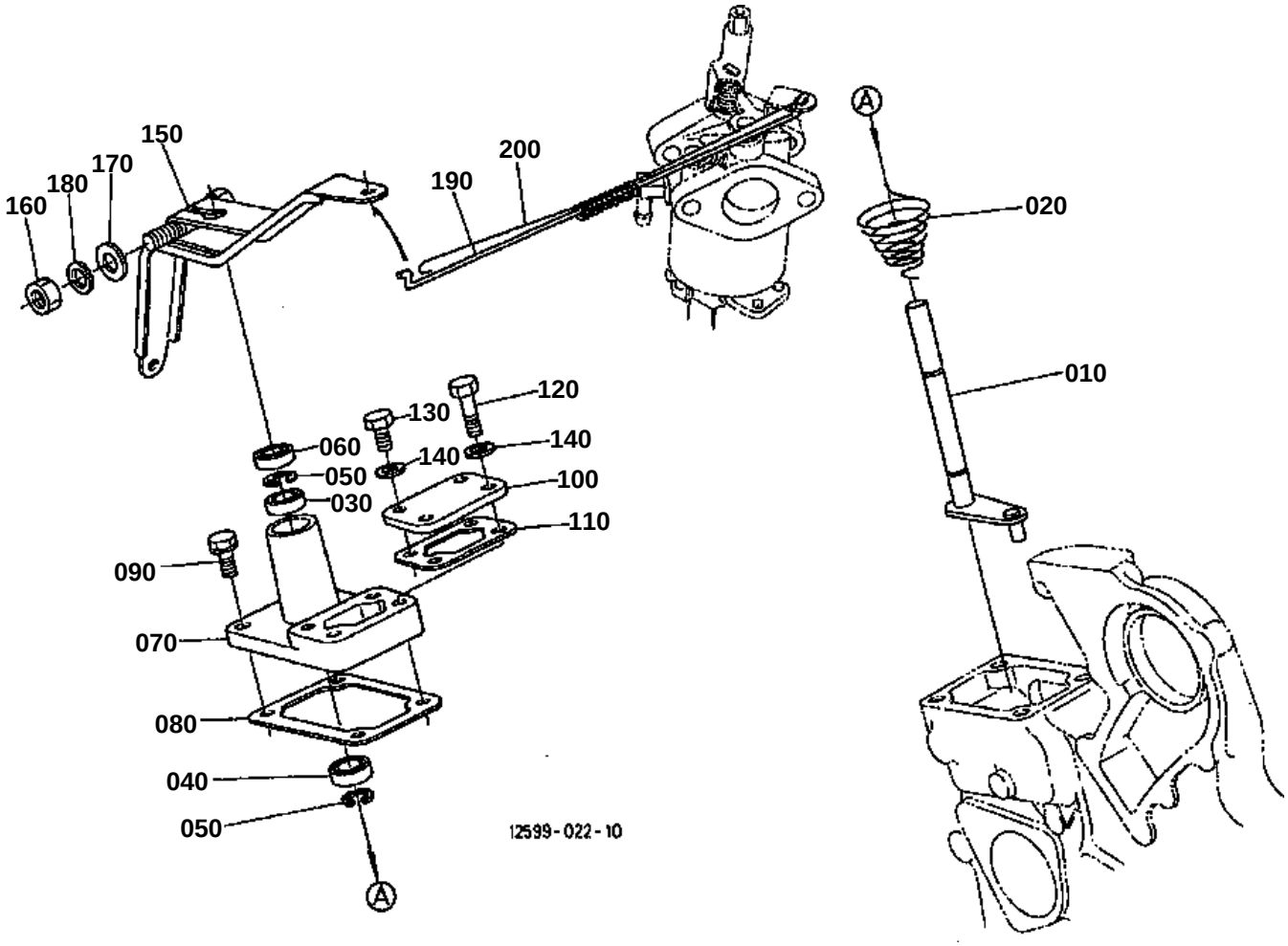
150
170
180
160
190
200
A
020
010
120
130
140
060
140
050
100
030
110
090
070
080
040
050
12599-022-10
A

GOVERNOR

↔ Interchangeable; ≠ not interchangeable; ← new for old; → old for new

REF.No	Part No.	Description	Q'ty	S.No.	I/C	REMARKS	Weight (kgf)	Weight (lb)
010	12581-56100	COMP LEVER GOVERNOR	1				0.055	0.121
020	12581-55870	SPRING GOVERNOR LEVR	1				0.004	0.0088
030	EG283-55810	BEARING	1				0.002	0.0044
040	EG283-55820	BEARING	1				0.003	0.0066
050	12581-55830	CIR-CLIP	2				0.001	0.0022
060	12581-55850	SEAL OIL	1				0.002	0.0044
070	12581-56310	SUPPORT GOV.L.SHAFT	1				0.07	0.154
080	15841-57212	GASKET CONTROL PLATE	1				0.001	0.0022
090	01023-50618	BOLT	2				0.006	0.0132
100	12581-56330	COVER	1				0.028	0.0616
110	EG281-56340	GASKET	1				0.001	0.0022
120	01053-50622	BOLT	2				0.007	0.0154
130	01053-50612	BOLT	2				0.004	0.0088
140	15601-96650	GASKET	4				0.001	0.0022
150	EG294-56110	LEVER GOVERNOR	1				0.11	0.242
160	02156-50080	NUT	1				0.004	0.0088
170	04013-60080	WASHER PLAIN	1				0.002	0.0044
180	04512-60080	WASHER SPRING	1				0.002	0.0044
190	12581-56350	ROD GOVERNOR CON/ROD	1				0.01	0.022
200	12581-56390	SPRING	1				0.004	0.0088

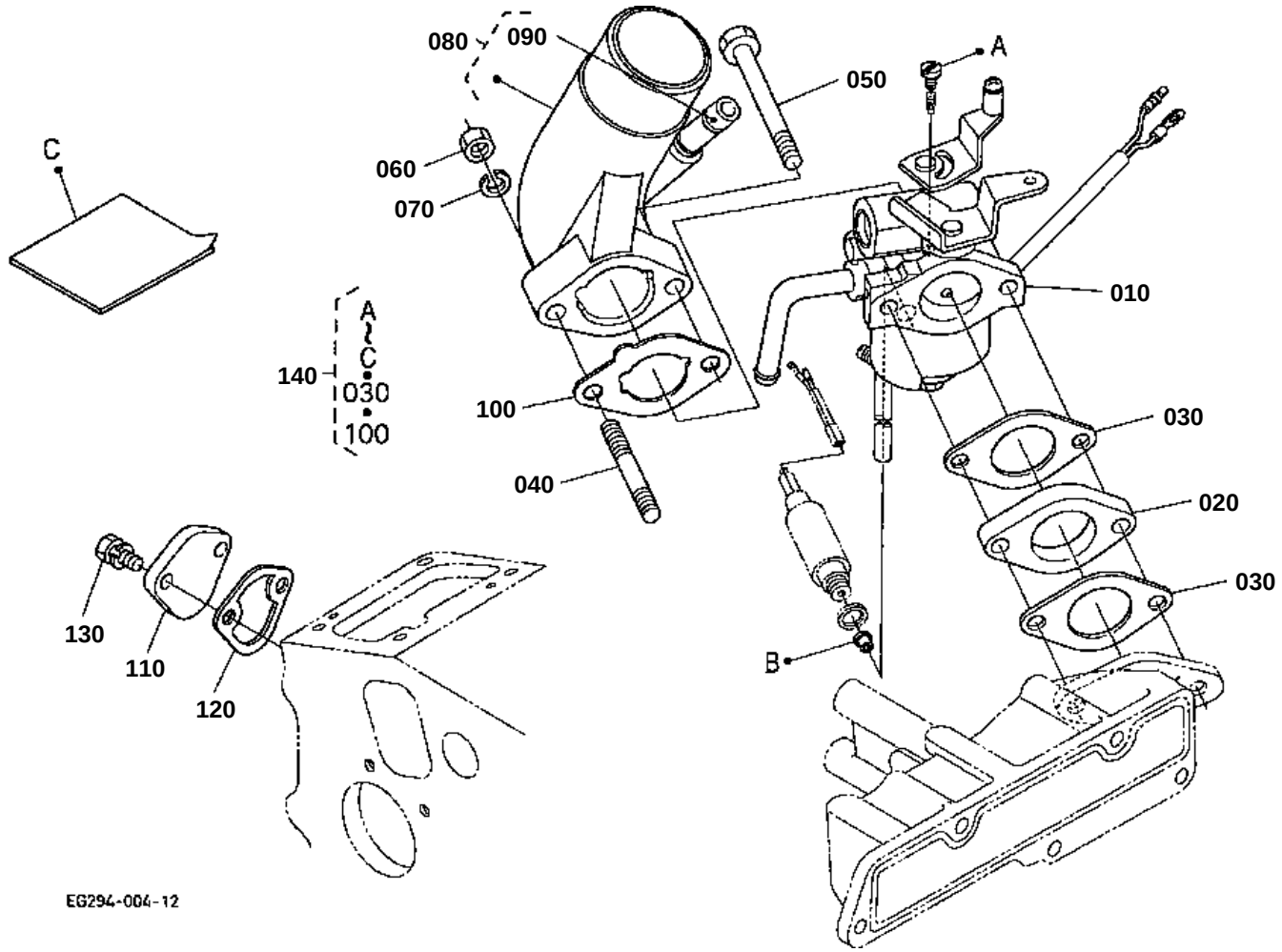
080
090
050
A
C
060
070
010
A
~
C
140
030
100
100
030
040
020
030
130
110
120
B
EG294-004-12

CABURETTOR

↔ Interchangeable; ≠ not interchangeable; ← new for old; → old for new

REF.No	Part No.	Description	Q'ty	S.No.	I/C	REMARKS	Weight (kgf)	Weight (lb)
010	EG294-44012	ASSY CARBURETTOR	1	<=YY8644			0.4	0.88
010	EG294-44014	ASSY CARBURETTOR	1	>=1A0001	≠		0.45	0.99
020	EG294-46150	FLANGE CARBURETTOR	1				0.011	0.0242
030	12035-46110	GASKET CARBURETOR.NA	2				0.002	0.0044
040	EG261-91490	STUD	1				0.04	0.088
050	01123-50895	BOLT	1				0.04	0.088
060	02156-50080	NUT	1				0.004	0.0088
070	04512-60080	WASHER SPRING	1				0.002	0.0044
080	EG294-11600	FLANGE AIR CLEANER	1				0.16	0.352
090	EG261-73372	JOINT	1				0.002	0.0044
100	EG261-11510	GASKET AIR CLEANER	1				0.014	0.0308
110	15852-52850	COVER	1				0.058	0.1276
120	16264-52140	GASKET FUEL PUMP	1				0.001	0.0022
130	01023-50616	BOLT	2				0.005	0.011
140	EG294-99300	KIT COMPENSATION	1			0m	0.01	0.022
140	EG294-99310	KIT COMPENSATION	1			1000m	0.01	0.022
140	EG294-99320	KIT COMPENSATION	1			2000m	0.01	0.022

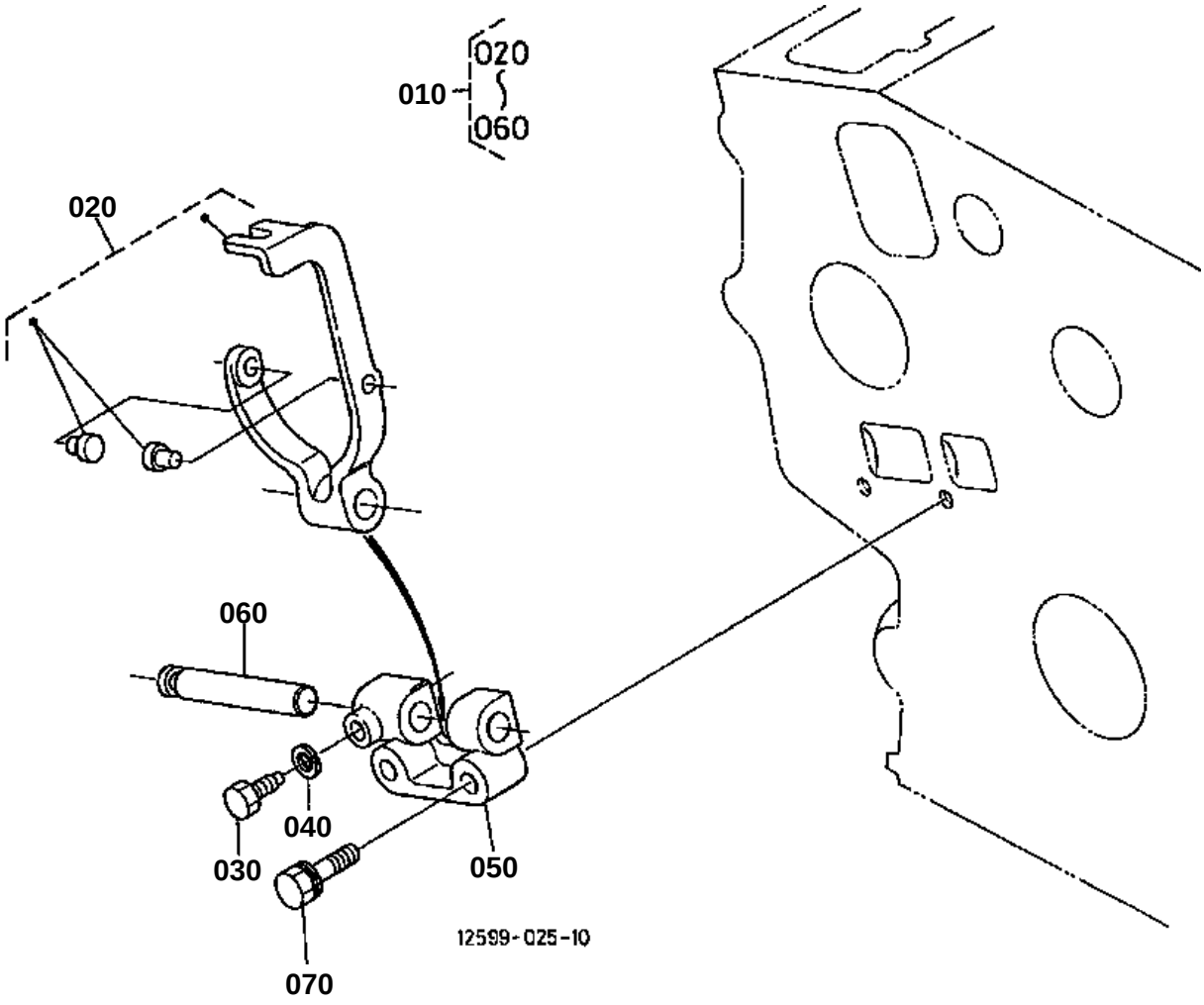
010
020
060
020
060
040
030
050
070
12599-025-10

FORK LEVER

↔ Interchangeable; ≠ not interchangeable; ← new for old; → old for new

REF.No	Part No.	Description	Q'ty	S.No.	I/C	REMARKS	Weight (kgf)	Weight (lb)
010	12581-56050	ASSY LEVER FORK	1				0.15	0.33
020	12581-56040	COMP.LEVER FORK	1				0.08	0.176
030	15261-66410	BOLT	1				0.003	0.0066
040	04512-60050	WASHER SPRING	1				0.002	0.0044
050	15841-56230	HOLDER FORK LEVER	1				0.035	0.077
060	12581-56150	SHAFT FORK LEVER	1				0.01	0.022
070	01023-50635	BOLT	2				0.01	0.022

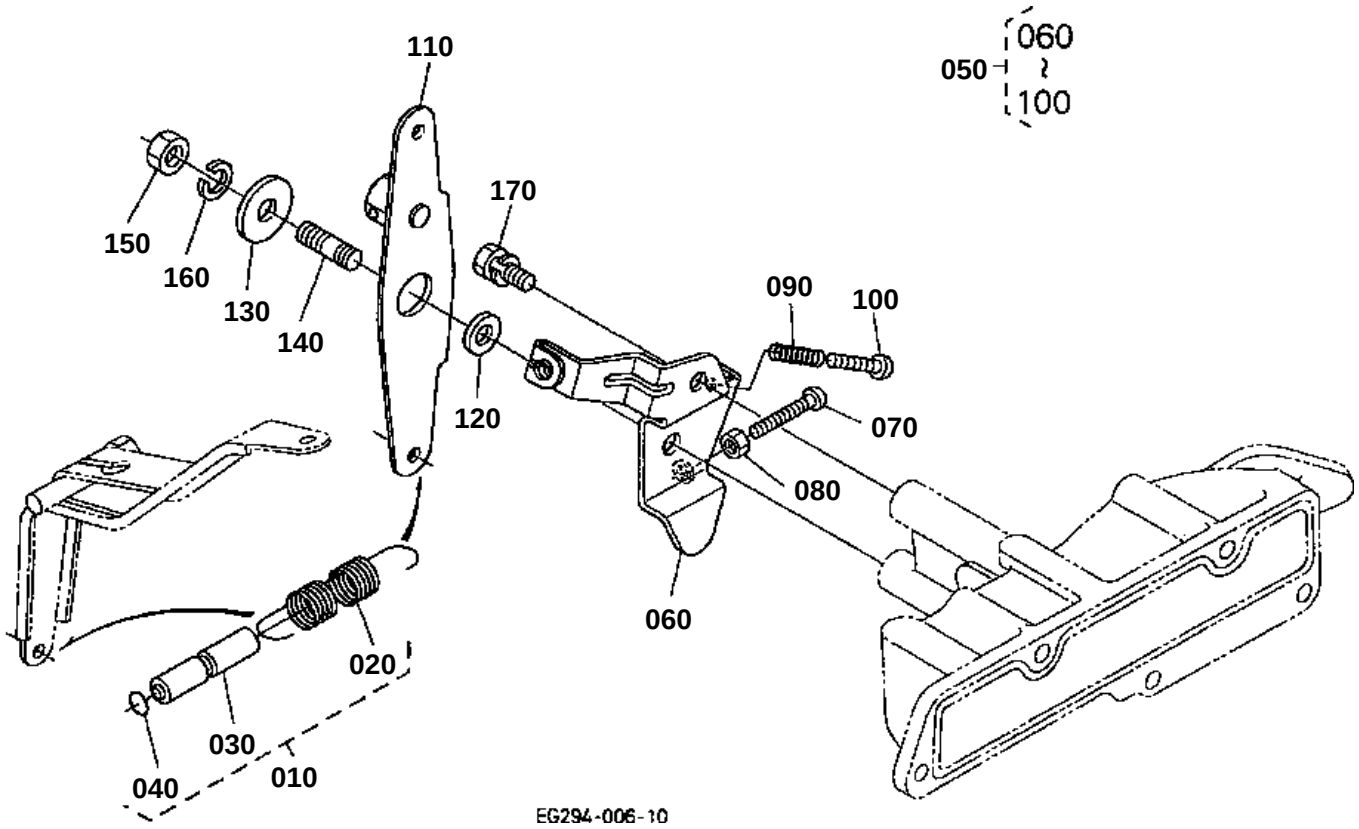
110
060
050
100
170
150
160
130
140
090
100
120
070
080
060
020
030
040
010
EG294-006-10

SPEED CONTROL LEVER

↔ Interchangeable; ≠ not interchangeable; ← new for old; → old for new

REF.No	Part No.	Description	Q'ty	S.No.	I/C	REMARKS	Weight (kgf)	Weight (lb)
010	EG294-56400	ASSY SPRING GOVERNOR	1				0.025	0.055
020	EG294-56410	SPRING GOVERNOR	1				0.012	0.0264
030	EG294-56460	ASSY CUSHION	1				0.015	0.033
040	04814-00120	O RING	1				0.001	0.0022
050	EG294-57010	ASSY PLATE CONTROL	1				0.06	0.132
060	EG294-57110	PLATE CONTROL	1				0.055	0.121
070	03054-50525	SCREW PAN-HEAD	1				0.005	0.011
080	02054-50050	NUT	1				0.002	0.0044
090	13641-56860	SPRING	1				0.001	0.0022
100	03054-50420	SCREW PAN-HEAD	1				0.002	0.0044
110	12599-57040	ASSY LEVER CONTROL	1				0.065	0.143
120	12581-57240	COLLAR	1				0.004	0.0088
130	04015-60080	WASHER PLAIN	1				0.01	0.022
140	01518-50820	STUD	1				0.012	0.0264
150	02156-50080	NUT	1				0.004	0.0088
160	04512-60080	WASHER SPRING	1				0.002	0.0044
170	01023-50614	BOLT	1				0.005	0.011

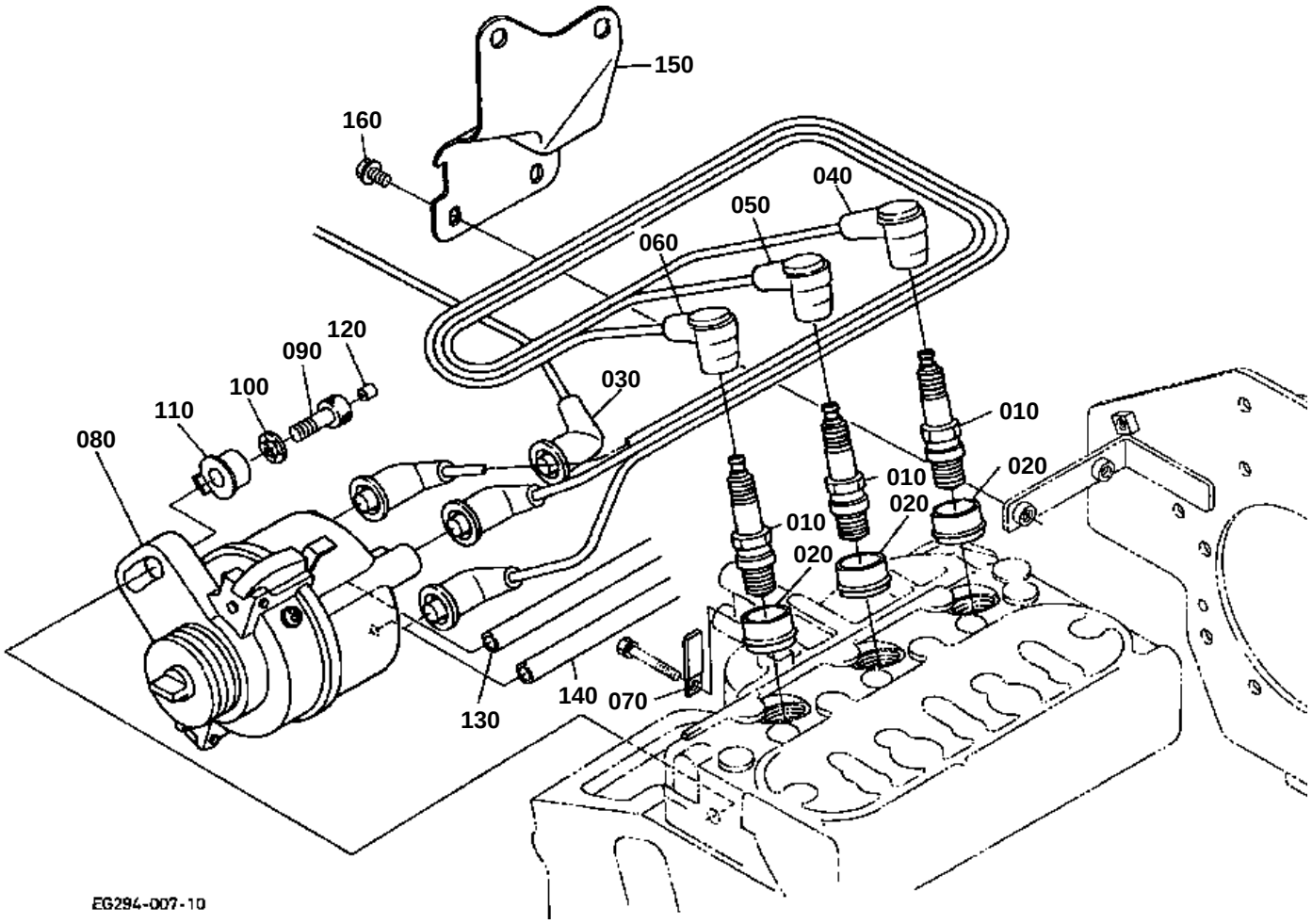
150
160
040
050
060
120
090
100
110
080
030
010
020
010
020
010
020
130
140
070
EG294-007-10

↔ Interchangeable; ≠ not interchangeable; ← new for old; → old for new

REF.No	Part No.	Description	Q'ty	S.No.	I/C	REMARKS	Weight (kgf)	Weight (lb)
010	12599-67710	SPARK PLUG	3				0.1	0.22
020	EG283-67720	CAP SPARK PLUG	3				0.003	0.0066
030	12691-67510	ASSY CORD CENTER	1				0.05	0.11
040	12691-67520	ASSY CORD PLUG	1	<=YY8644			0.05	0.11
040	EG601-67522	ASSY CORD PLUG	1	>=1A0001	≠		0.08	0.176
050	12691-67530	ASSY CORD PLUG	1	<=YY8644			0.05	0.11
050	EG601-67530	ASSY CORD PLUG	1	>=1A0001	≠		0.08	0.176
060	12691-67540	ASSY CORD PLUG	1	<=YY8644			0.05	0.11
060	EG601-67542	ASSY CORD PLUG	1	>=1A0001	≠		0.09	0.198
070	15272-67590	CLAMP CORD	1				0.004	0.0088
080	12692-68802	ASSY DISTRIBUTOR AIR	1			REFER TO Fig.No.1301 FOR COMPONENTS.	0.59	1.298
090	01311-10825	BOLT HEX-SOC-HD	1				0.02	0.044
100	34070-70850	WASHER WAVE	1				0.005	0.011
110	EG281-68550	COVER TAMPER	1				0.008	0.0176
120	EG281-68560	PLUG	1				0.001	0.0022
130	12581-68820	PIPE	1				0.01	0.022
140	EG283-68830	PIPE	1				0.007	0.0154
150	12692-68843	COVER	1				0.1	0.22
160	03034-50510	SCREW WITH WASHER	4				0.003	0.0066

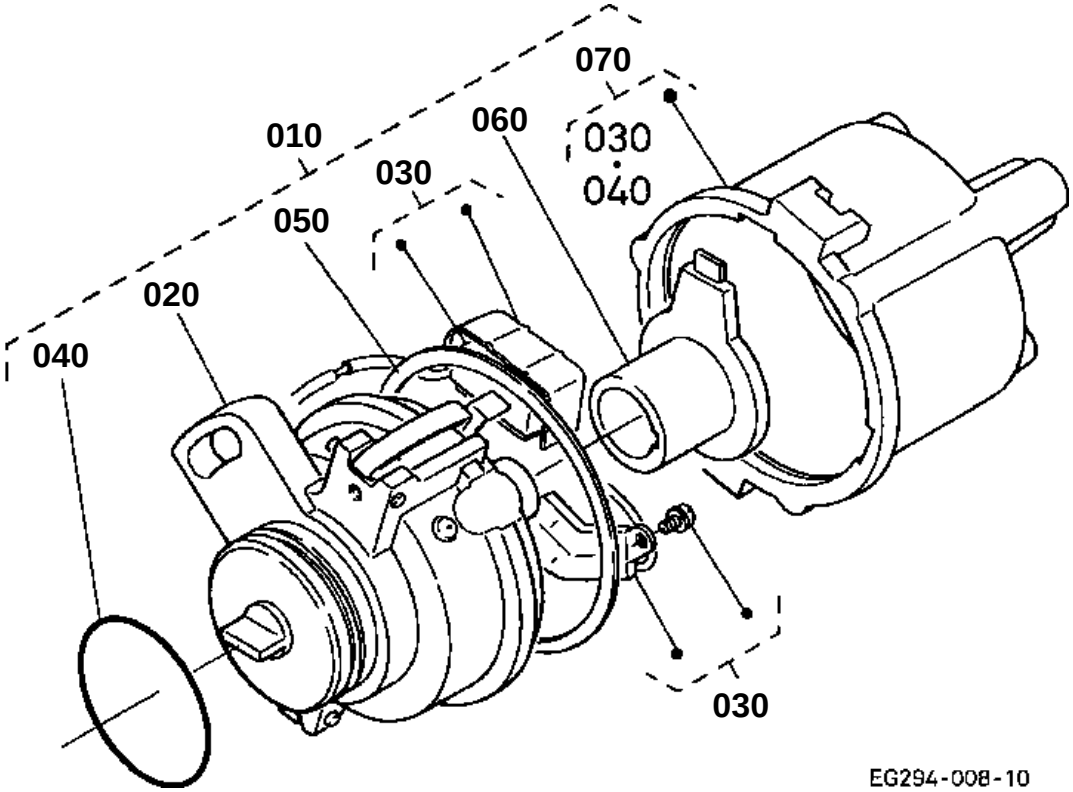
070
010
060
030
040
030
050
020
040
030
EG294-008-10

DISTRIBUTOR (COMPONENT PARTS)

↔ Interchangeable; ≠ not interchangeable; ← new for old; → old for new

REF.No	Part No.	Description	Q'ty	S.No.	I/C	REMARKS	Weight (kgf)	Weight (lb)
010	12692-68802	ASSY DISTRIBUTOR AIR	1				0.59	1.298
020	12692-68502	KIT HOUSING	1				0.5	1.1
030	12692-68602	ASSY IGNITER	1				0.15	0.33
040	12581-68510	O RING	1				0.001	0.0022
050	12581-68630	GASKET	1				0.004	0.0088
060	EG283-68650	ASSY ROTOR	1				0.019	0.0418
070	12581-68670	ASSY CAP	1				0.1	0.22

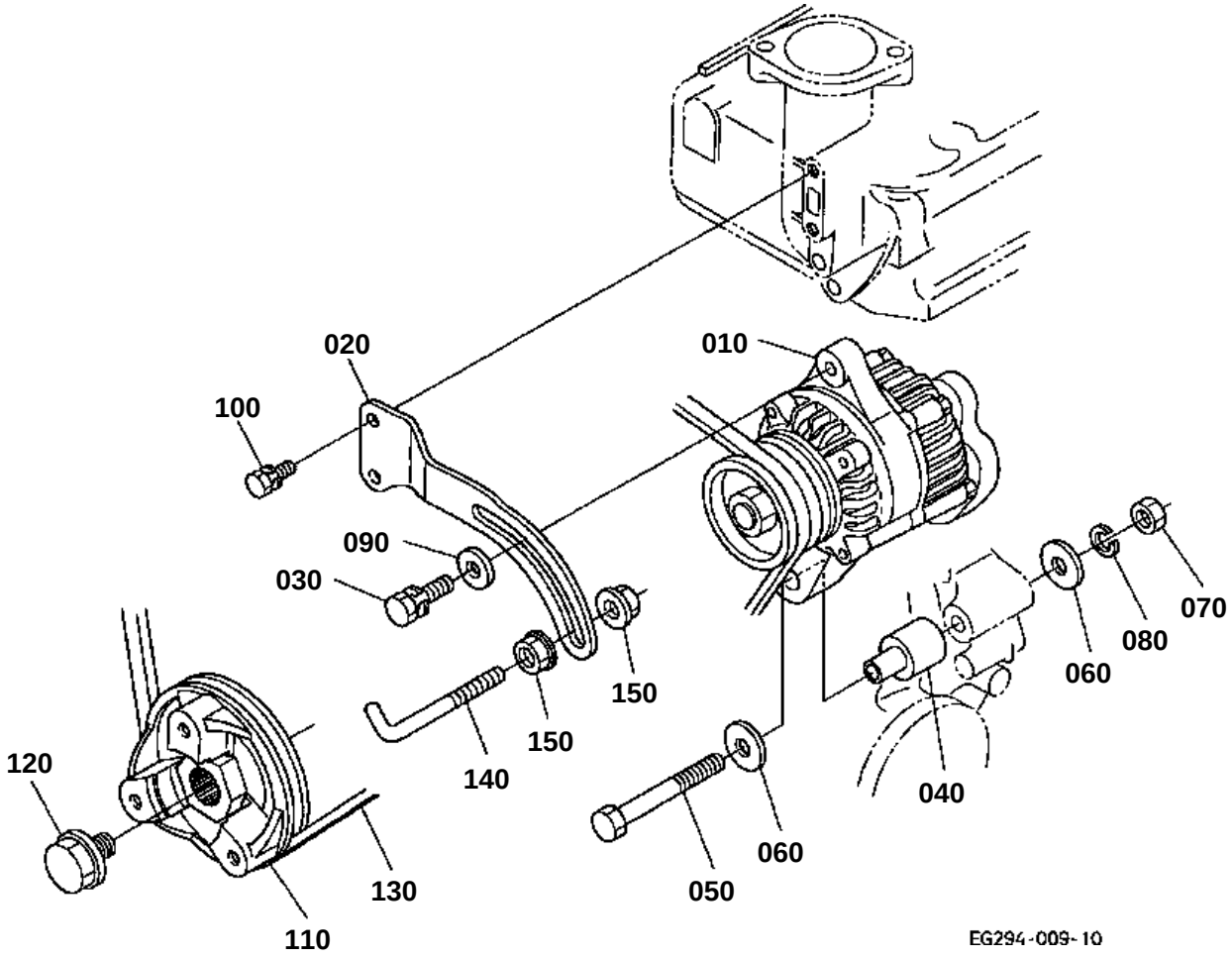
020
010
100
090
030
070
080
060
150
150
140
120
040
060
050
130
110
EG294-009-10

↔ Interchangeable; ≠ not interchangeable; ← new for old; → old for new

REF.No	Part No.	Description	Q'ty	S.No.	I/C	REMARKS	Weight (kgf)	Weight (lb)
010	16231-64010	ASSY ALTERNATOR	1	<=YY8644		REFER TO Fig.No.1403 FOR COMPONENTS.	0	0
010	16231-64012	ASSY ALTERNATOR	1	>=1U0001	←	REFER TO Fig.No.1403 FOR COMPONENTS.	2.92	6.424
020	17548-64420	STAY ALTERNATOR	1				0.1	0.22
030	01123-50830	BOLT	1				0.015	0.033
040	19837-64372	COLLAR	1				0.06	0.132
050	01153-50875	BOLT	1				0.028	0.0616
060	04013-60080	WASHER PLAIN	2				0.002	0.0044
070	02156-50080	NUT	1				0.004	0.0088
080	04512-60080	WASHER SPRING	1				0.002	0.0044
090	04015-60080	WASHER PLAIN	1				0.01	0.022
100	01023-50616	BOLT	2				0.005	0.011
110	16861-74280	PULLEY FAN DRIVE	1				1.1	2.42
120	15881-91030	BOLT	1				0.06	0.132
130	15881-97010	V BELT	1				0.08	0.176
140	K1211-87150	STOPPER RAD	1				0	0
150	02751-50080	NUT FLANGE	2				0.006	0.0132

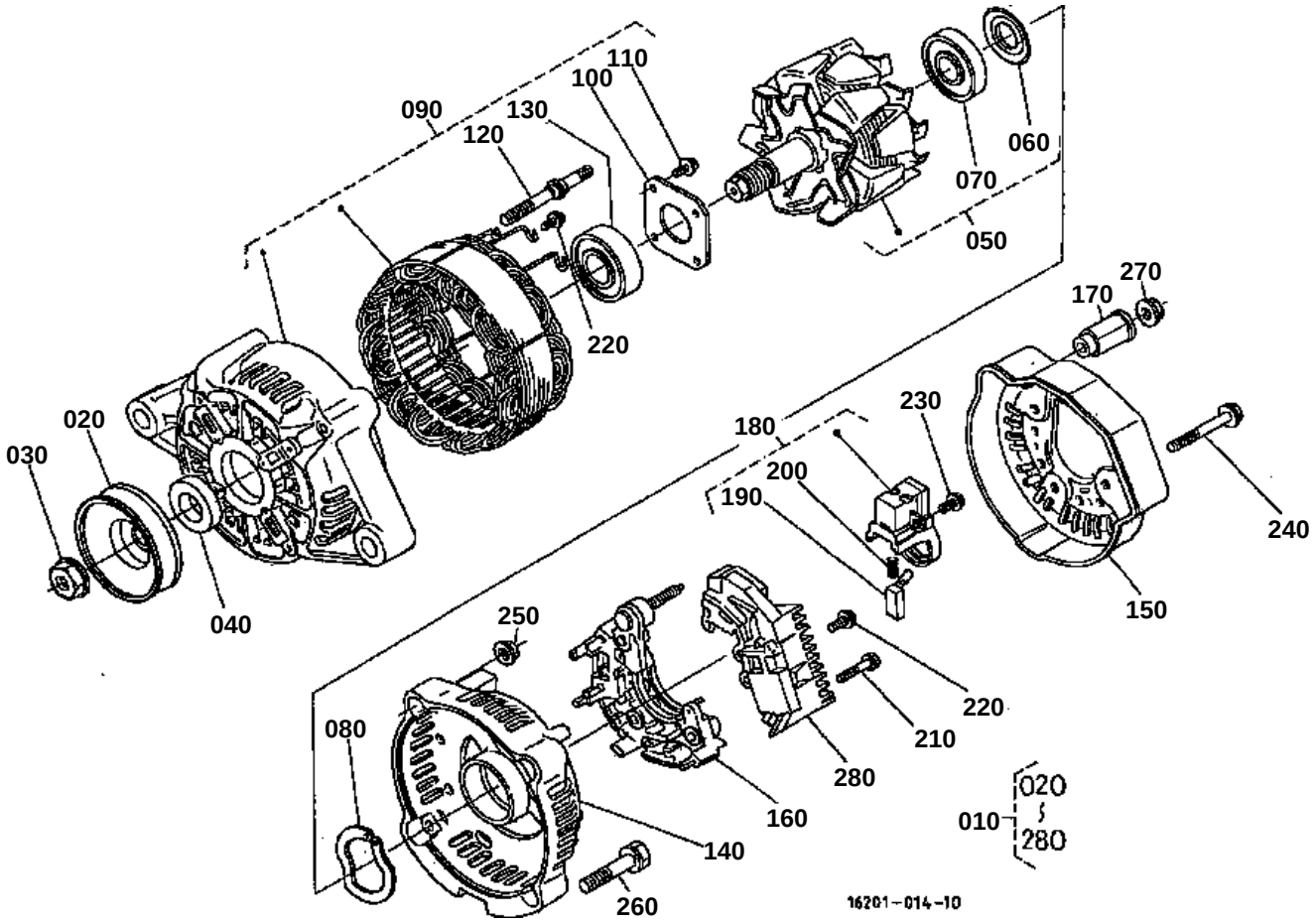
090
130
120
110
100
060
070
050
220
270
170
230
180
200
190
240
150
020
030
040
250
220
210
080
280
160
140
260
020
010
280
16201-014-10

ALTERNATOR (COMPONENT PARTS)

↔ Interchangeable; ≠ not interchangeable; ← new for old; → old for new

REF.No	Part No.	Description	Q'ty	S.No.	I/C	REMARKS	Weight (kgf)	Weight (lb)
010	16231-64010	ASSY ALTERNATOR	1	<=YY8644			0	0
010	16231-64012	ASSY ALTERNATOR	1	>=1U0001	←		2.92	6.424
020	15881-64110	PULLEY DYNAMO	1				0.16	0.352
030	15881-92010	NUT	1				0.02	0.044
040	15881-64150	COLLAR	1				0.004	0.0088
050	66436-64040	ROTOR	1	<=YY8644		NOT SALE	1.2	2.64
050	66436-64040	ROTOR	1	>=1U0001	←		1.2	2.64
060	15881-64800	COVER BEARING	1				0.001	0.0022
070	15881-64770	BEARING BALL	1				0.04	0.088
080	15881-64810	WASHER THRUST	1				0.002	0.0044
090	16231-64020	FRAME DRIVE END	1				1.2	2.64
100	15881-64710	PLATE RETAINER	1				0.01	0.022
110	15881-93010	SCREW ROUND HEAD	4				0.003	0.0066
120	15881-64260	BOLT THROUGH	2				0.01	0.022
130	16652-64780	BEARING BALL	1				0.05	0.11
140	16241-64060	FRAME END	1	<=YY8644			0.2	0.44
140	16231-64060	FRAME END	1	>=1U0001	←		0.17	0.374
150	16231-64230	COVER END	1				0.035	0.077
160	16231-64850	ASSY RECTIFIER	1				0.18	0.396
170	16241-64900	BUSH INSULATION	1				0.007	0.0154
180	16652-64310	HOLDER BRUSH	1				0.025	0.055
190	15881-64090	BRUSH	2				0.002	0.0044
200	15881-64330	SPRING BRUSH	2				0.002	0.0044
210	15881-93020	SCREW ROUND HEAD	2				0.005	0.011
220	15881-93030	SCREW ROUND HEAD	6				0.003	0.0066
230	15881-93040	SCREW ROUND HEAD	1				0.003	0.0066
240	15881-91040	BOLT	3				0.005	0.011
250	15881-92020	NUT	2				0.02	0.044
260	15881-91050	BOLT	2				0.01	0.022
270	14182-92030	NUT	1				0.003	0.0066
280	66436-64600	ASSY REGULATOR	1				0.08	0.176

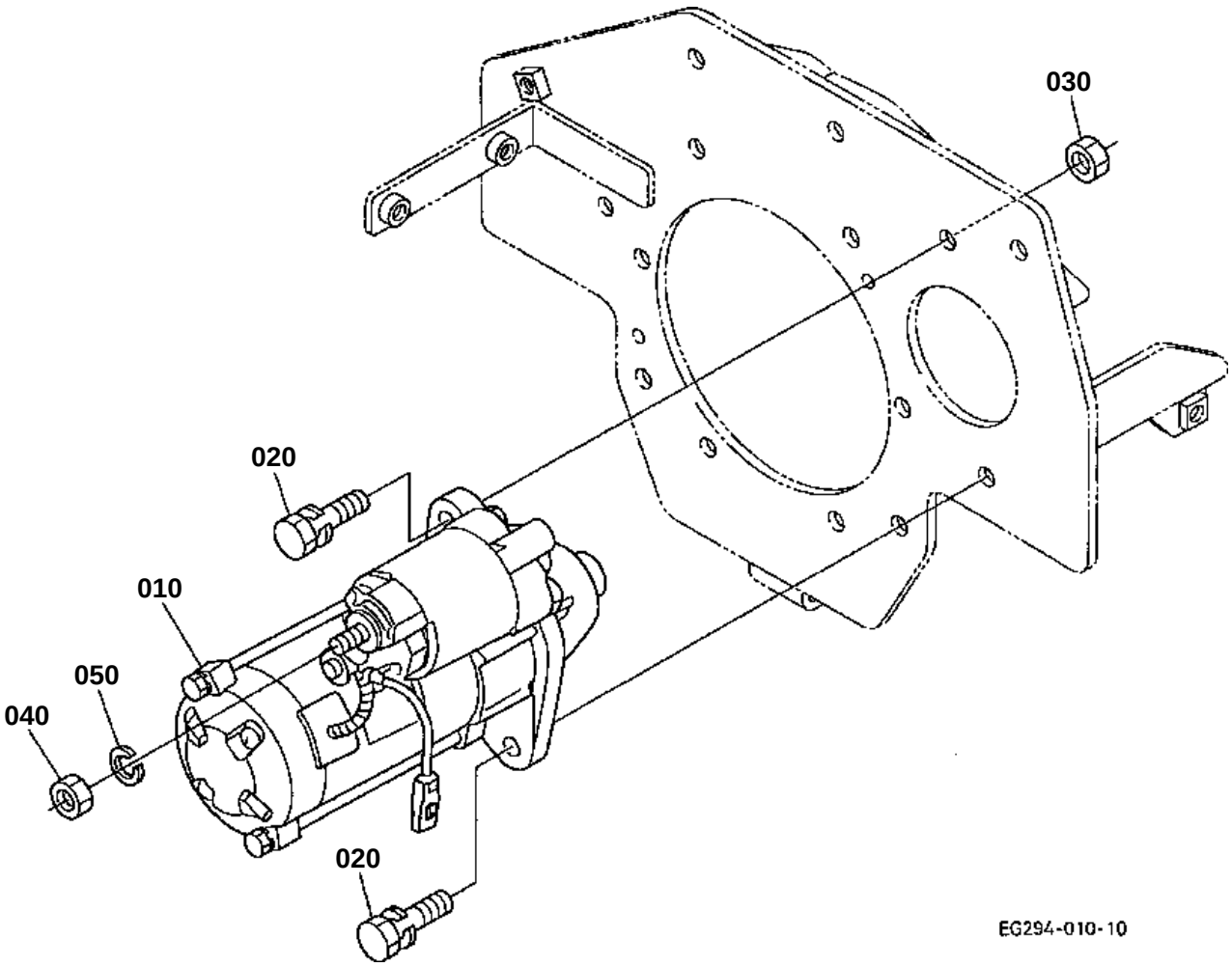
030
020
010
050
040
020
EG294-010-10

↔ Interchangeable; ≠ not interchangeable; ← new for old; → old for new

REF.No	Part No.	Description	Q'ty	S.No.	I/C	REMARKS	Weight (kgf)	Weight (lb)
010	15852-63010	ASSY STARTER	1				3.4	7.48
020	01123-50828	BOLT	2				0.014	0.0308
030	02156-50080	NUT	1				0.004	0.0088
040	02156-50080	NUT	1				0.004	0.0088
050	04512-60080	WASHER SPRING	1				0.002	0.0044

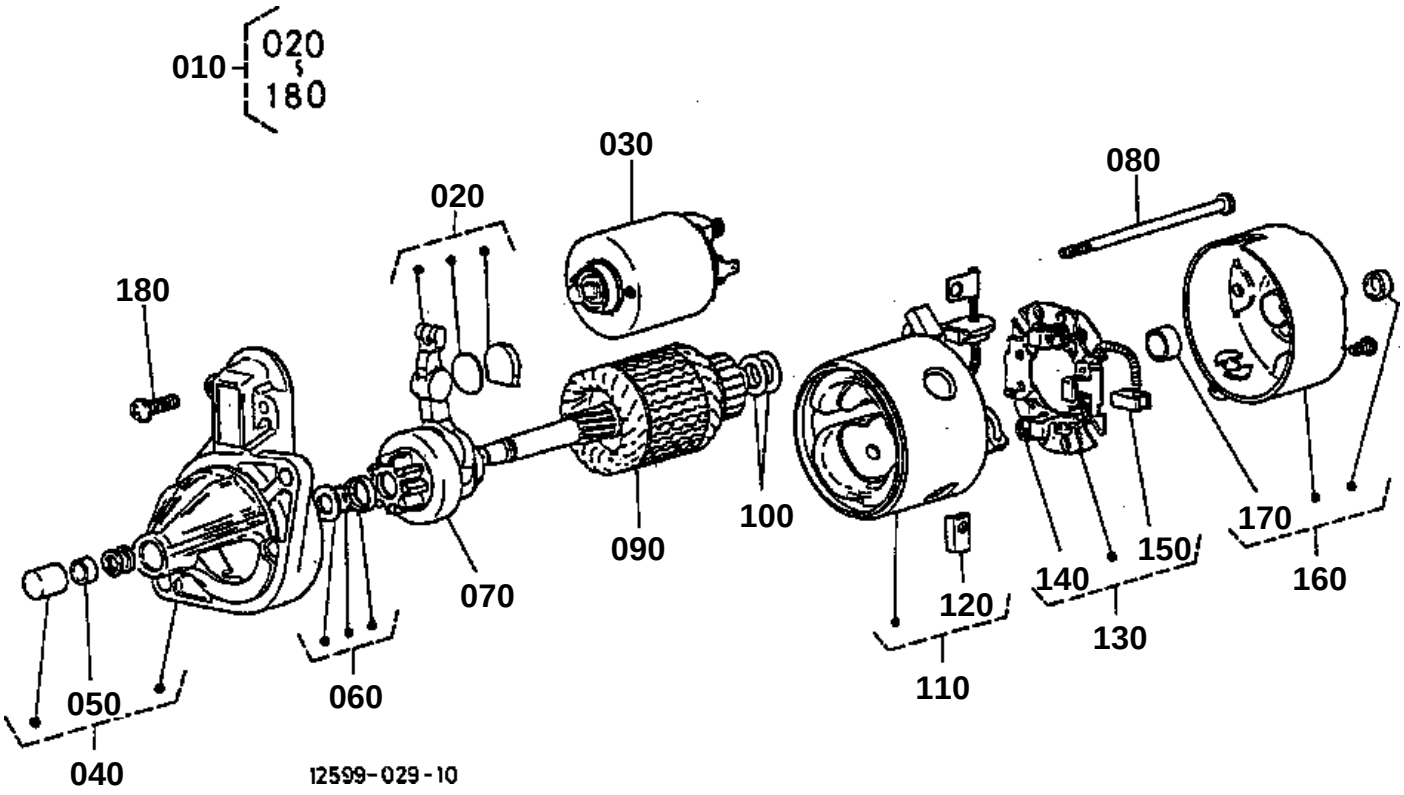
010
020
180
030
080
020
180
100
090
070
170
150
140
160
120
130
110
050
060
040
12599-029-10

STARTER (COMPONENT PARTS)

↔ Interchangeable; ≠ not interchangeable; ← new for old; → old for new

REF.No	Part No.	Description	Q'ty	S.No.	I/C	REMARKS	Weight (kgf)	Weight (lb)
010	15852-63010	ASSY STARTER	1				3.4	7.48
020	15852-63050	LEVER DRIVE	1				0.015	0.033
030	15852-63020	SWITCH MAGNETIC	1				0.65	1.43
040	15852-63030	FRAME DRIVE END	1				0.274	0.6028
050	15852-63240	BUSH	1				0.006	0.0132
060	19837-63150	STOPPER	1				0.007	0.0154
070	15852-63040	CLUTCH OVER RUNNING	1				0.25	0.55
080	15852-63320	BOLT	1				0.016	0.0352
090	15852-63070	ARMATURE	1				0.99	2.178
100	15852-63410	WASHER ADJUSTING	1				0.006	0.0132
110	15852-63080	YOKE	1				0.97	2.134
120	15852-63360	BRUSH	1				0.005	0.011
130	15852-63380	HOLDER BRUSH	1				0.052	0.1144
140	15852-63390	SPRING BRUSH	1				0.002	0.0044
150	15852-63370	BRUSH	1				0.006	0.0132
160	15852-63200	FRAME END	1				0.2	0.44
170	15852-63250	BUSH	1				0.006	0.0132
180	15852-93310	SCREW PAN-HEAD	1				0.02	0.044

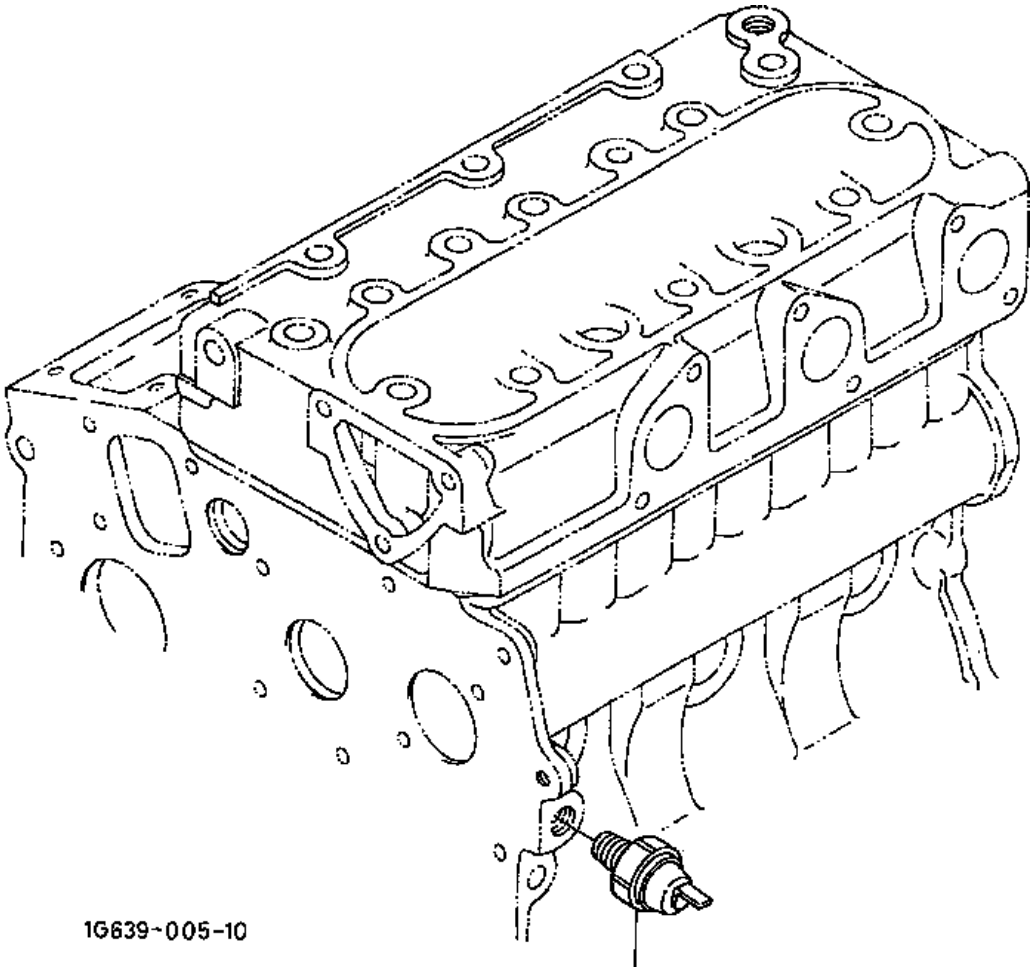
1G639-005-10
010

↔ Interchangeable; ≠ not interchangeable; ← new for old; → old for new

REF.No	Part No.	Description	Q'ty	S.No.	I/C	REMARKS	Weight (kgf)	Weight (lb)
010	15531-39010	SWITCH OIL	1				0.032	0.0704

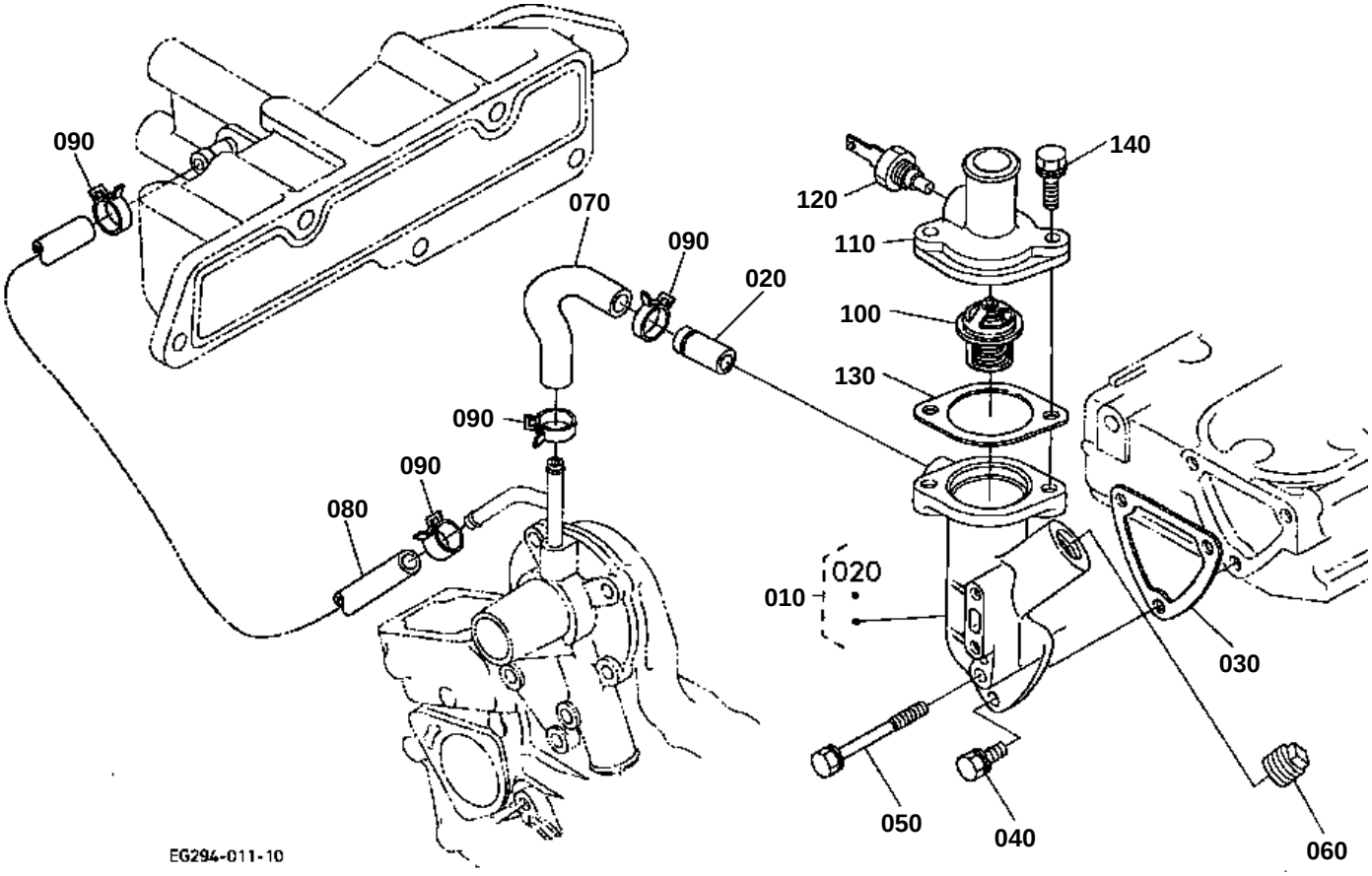
090
070
090
020
140
120
110
100
130
090
090
080
020
010
030
050
040
060
EG294-011-10

010 12691-7291-3

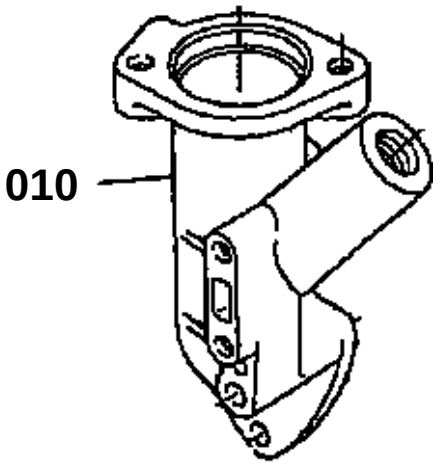

EG294-800-10

WATER FLANGE AND THERMOSTAT

↔ Interchangeable; ≠ not interchangeable; ← new for old; → old for new

REF.No	Part No.	Description	Q'ty	S.No.	I/C	REMARKS	Weight (kgf)	Weight (lb)
010	12691-72913	FLANGE WATER	1	<=YY8644			0.21	0.462
010	16873-72704	COMP.FLANGE WATER	1	>=1A0001	≠		0.22	0.484
020	16241-73370	PIPE WATER RETURN	1				0.007	0.0154
030	15841-72922	GASKET WATER FLANGE	1				0.001	0.0022
040	01023-50616	BOLT	2				0.005	0.011
050	01023-50650	BOLT	1				0	0
060	19298-96020	PLUG	1				0.027	0.0594
070	12691-73350	PIPE WATER RETURN	1				0.04	0.088
080	12691-73370	PIPE WATER RETURN	1	<=YY8644			0.06	0.132
080	EG601-73370	PIPE WATER RETURN	1	>=1A0001	≠		0.02	0.044
090	16241-73360	BAND PIPE	4				0.003	0.0066
100	15531-73010	ASSY THERMOSTAT	1				0.063	0.1386
110	16851-73260	COVER THERMOSTAT	1				0.06	0.132
120	16851-83040	SENSOR THERMO-SWITCH	1				0.03	0.066
130	16851-73270	GASKET THERMOSTAT	1				0.003	0.0066
140	01023-50622	BOLT	2				0.005	0.011

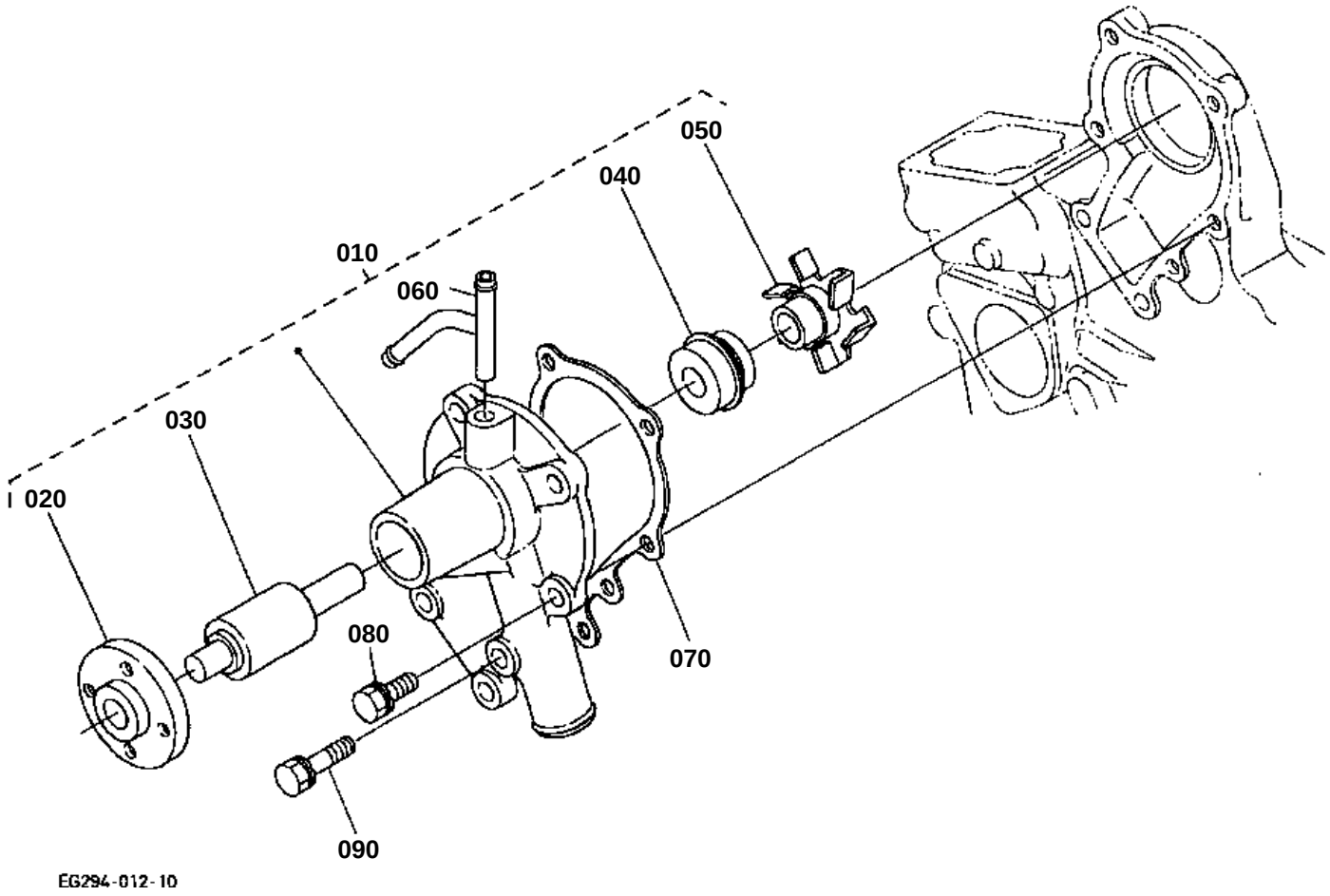
010
020
030
040
050
060
070
080
090
EG294-012-10

WATER PUMP
S.No.;<=YY8644

↔ Interchangeable; ≠ not interchangeable; ← new for old; → old for new

REF.No	Part No.	Description	Q'ty	S.No.	I/C	REMARKS	Weight (kgf)	Weight (lb)
010	EG601-73030	ASSY PUMP WATER	1				0.58	1.276
020	15852-73520	FLANGE WATER PUMP	1				0.13	0.286
030	15852-73550	BEARING	1				0.18	0.396
040	15481-73050	ASSY SEAL MECHANICAL	1				0.02	0.044
050	19883-73510	IMPELLER WATER PUMP	1				0.05	0.11
060	EG601-73340	PIPE WATER RETURN	1				0.03	0.066
070	15881-73432	GASKET WATER PUMP NA	1				0.002	0.0044
080	01023-50622	BOLT	4				0.005	0.011
090	01023-50638	BOLT	1				0.01	0.022

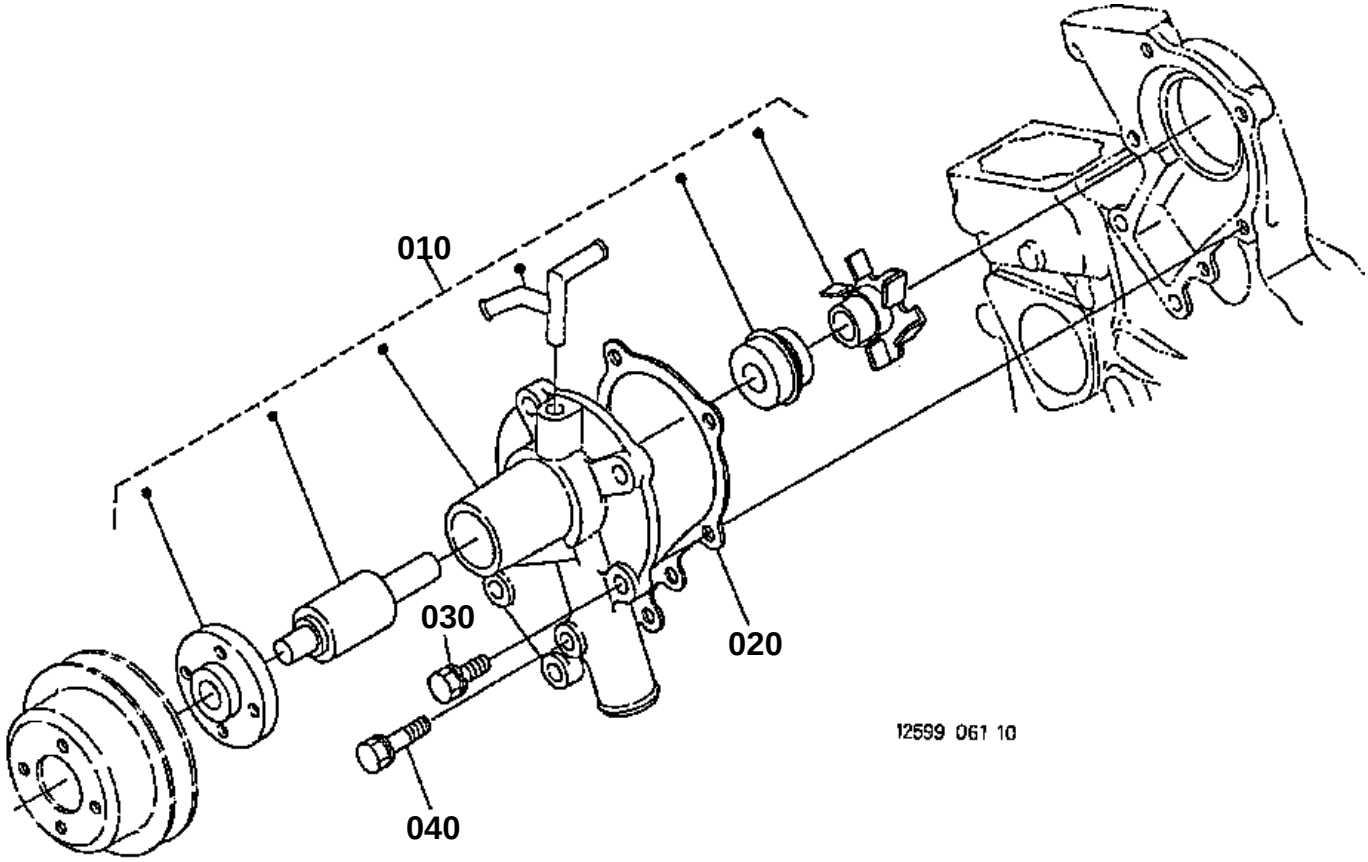
010
020
030
040
12599 061 10

↔ Interchangeable; ≠ not interchangeable; ← new for old; → old for new

REF.No	Part No.	Description	Q'ty	S.No.	I/C	REMARKS	Weight (kgf)	Weight (lb)
010	12691-73030	ASSY PUMP WATER	1				0.09	0.198
020	15881-73432	GASKET WATER PUMP NA	1				0.002	0.0044
030	01023-50622	BOLT	4				0.005	0.011
040	01023-50638	BOLT	1				0.01	0.022

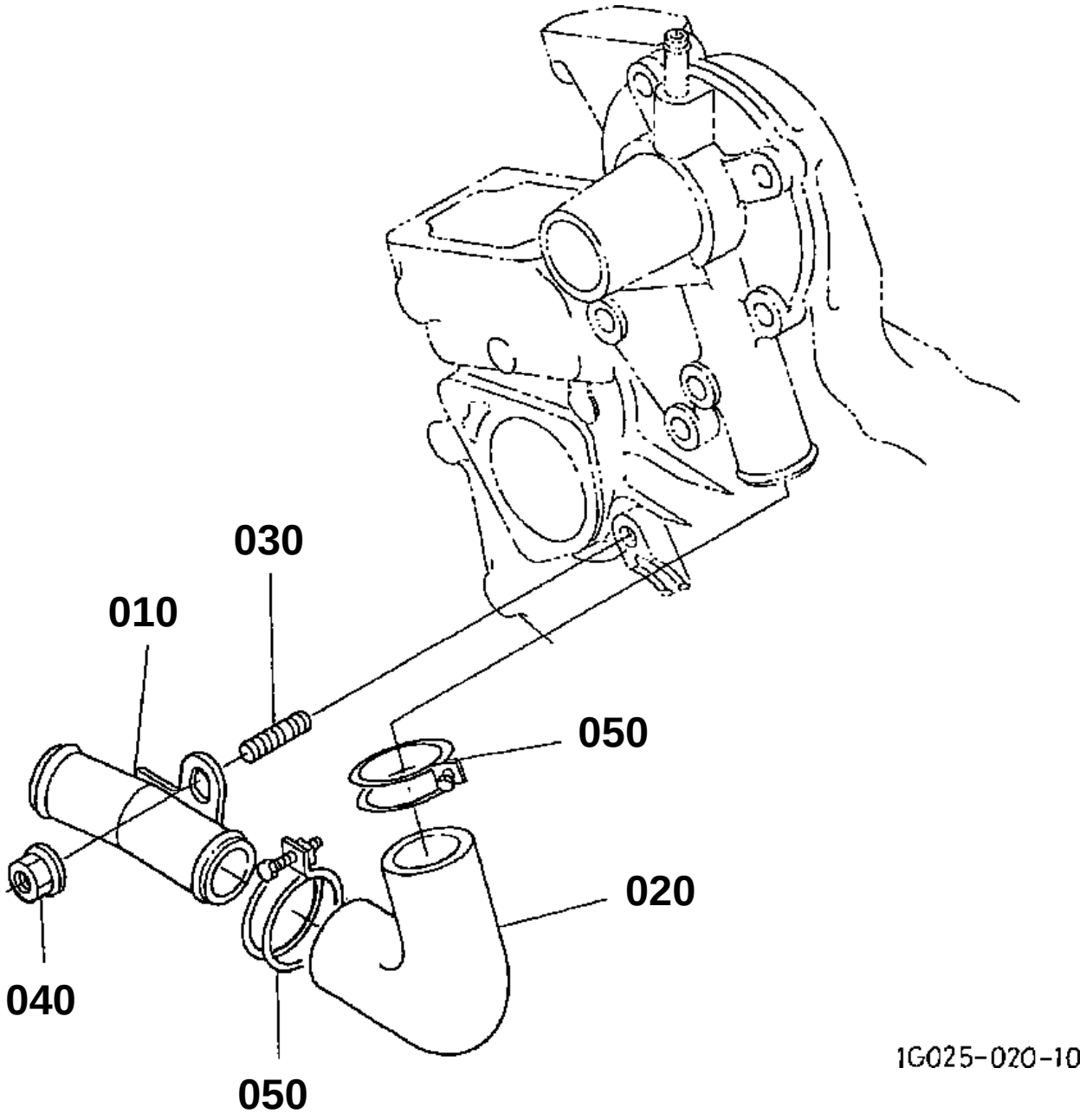
030
010
050
020
040
050
1G025-020-10

WATER PIPE

↔ Interchangeable; ≠ not interchangeable; ← new for old; → old for new

REF.No	Part No.	Description	Q'ty	S.No.	I/C	REMARKS	Weight (kgf)	Weight (lb)
010	15841-72860	PIPE WATER	1				0.09	0.198
020	15881-72870	PIPE WATER	1				0.03	0.066
030	15841-91510	STUD	1				0.007	0.0154
040	02751-50060	NUT FLANGE	1				0.005	0.011
050	15841-72960	BAND PIPE	2				0.025	0.055

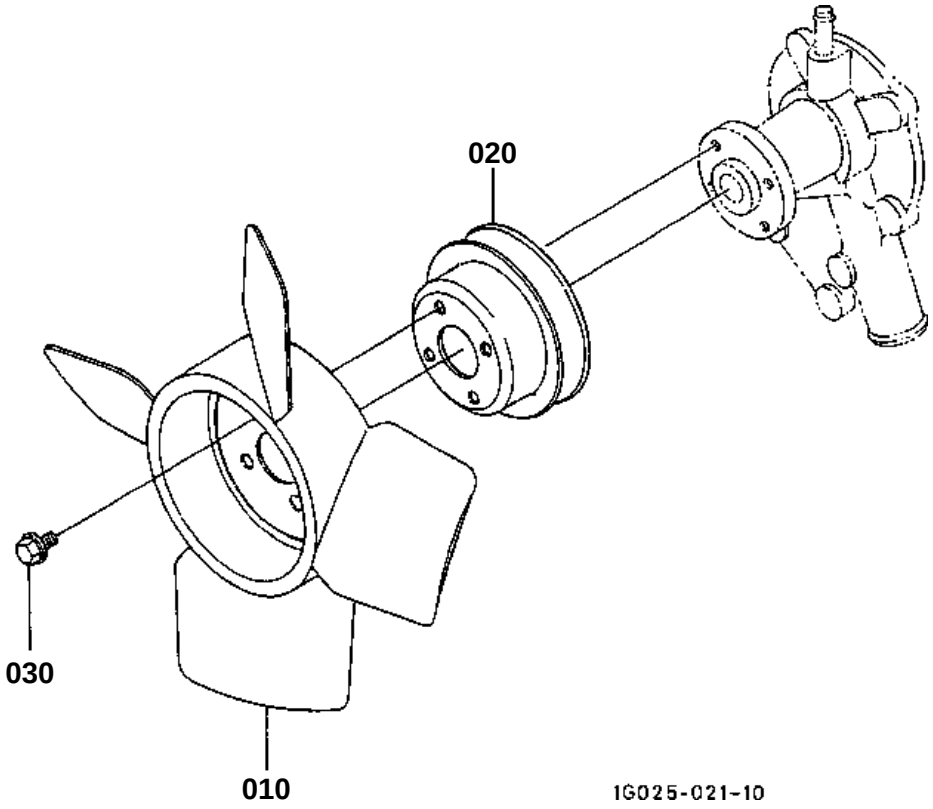
020
030
010
1G025-021-10

FAN

↔ Interchangeable; ≠ not interchangeable; ← new for old; → old for new

REF.No	Part No.	Description	Q'ty	S.No.	I/C	REMARKS	Weight (kgf)	Weight (lb)
010	15872-74110	FAN	1				0.25	0.55
020	15841-74250	PULLEY FAN	1				0.19	0.418
030	01754-50610	BOLT FLANGE	4				0.006	0.0132

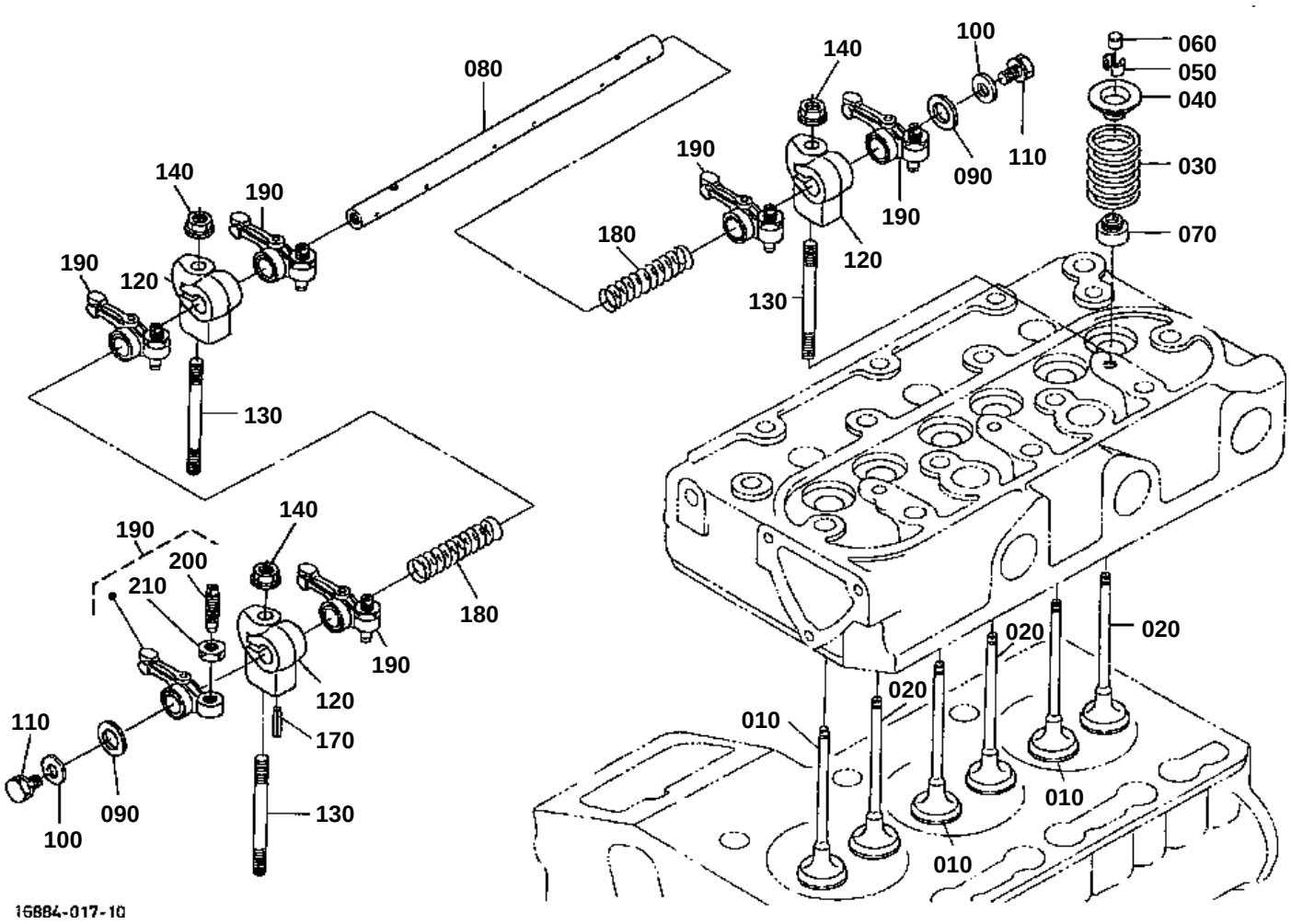
080
140
190
190
120
130
140
190
180
120
130
100
110
090
060
050
040
030
070
190
200
210
140
180
190
120
170
130
110
090
100
020
020
020
010
010
010
16884-017-10

140 02056-50060
150 04012-50060
160 04512-50060

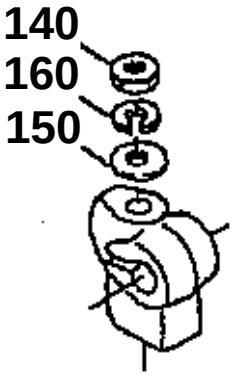

16263-820-10

VALVE AND ROCKER ARM

↔ Interchangeable; ≠ not interchangeable; ← new for old; → old for new

REF.No	Part No.	Description	Q'ty	S.No.	I/C	REMARKS	Weight (kgf)	Weight (lb)
010	14601-13110	VALVE INLET	3				0.03	0.066
020	12581-13120	VALVE EXHAUST	3				0.025	0.055
030	14601-13240	SPRING VALVE	6				0.015	0.033
040	14601-13330	RETAINER SPRING	6				0.01	0.022
050	14601-13360	COLLET VALVE SPRING	6			SET	0.001	0.0022
060	16851-13280	CAP VALVE	6				0.005	0.011
070	11420-13150	SEAL VALVE STEM	6				0.001	0.0022
080	15861-14263	SHAFT ROCKER ARM	1				0.094	0.2068
090	16871-14430	WASHER	2				0.002	0.0044
100	15841-94022	WASHER PLAIN	2				0.005	0.011
110	01023-50610	BOLT	2				0.005	0.011
120	15841-14350	BRACKET ROCKER ARM	3				0.026	0.0572
130	14601-14410	STUD	3				0.015	0.033
140	02056-50060	NUT	3	<=2C6513			0.002	0.0044
140	02751-50060	NUT FLANGE	3	>=2E0001	≠		0.005	0.011
150	04012-50060	WASHER PLAIN	3	<=2C6513			0.001	0.0022
160	04512-60060	WASHER SPRING	3	<=2C6513			0.001	0.0022
170	05411-00420	PIN SPRING	1				0.001	0.0022
180	14601-14310	SPRING ROCKER ARM	2				0.005	0.011
190	15841-14030	ASSY ROCKER ARM	6				0.04	0.088
200	15841-14230	SCREW ADJUSTING	6				0.003	0.0066
210	14601-14240	NUT	6				0.007	0.0154

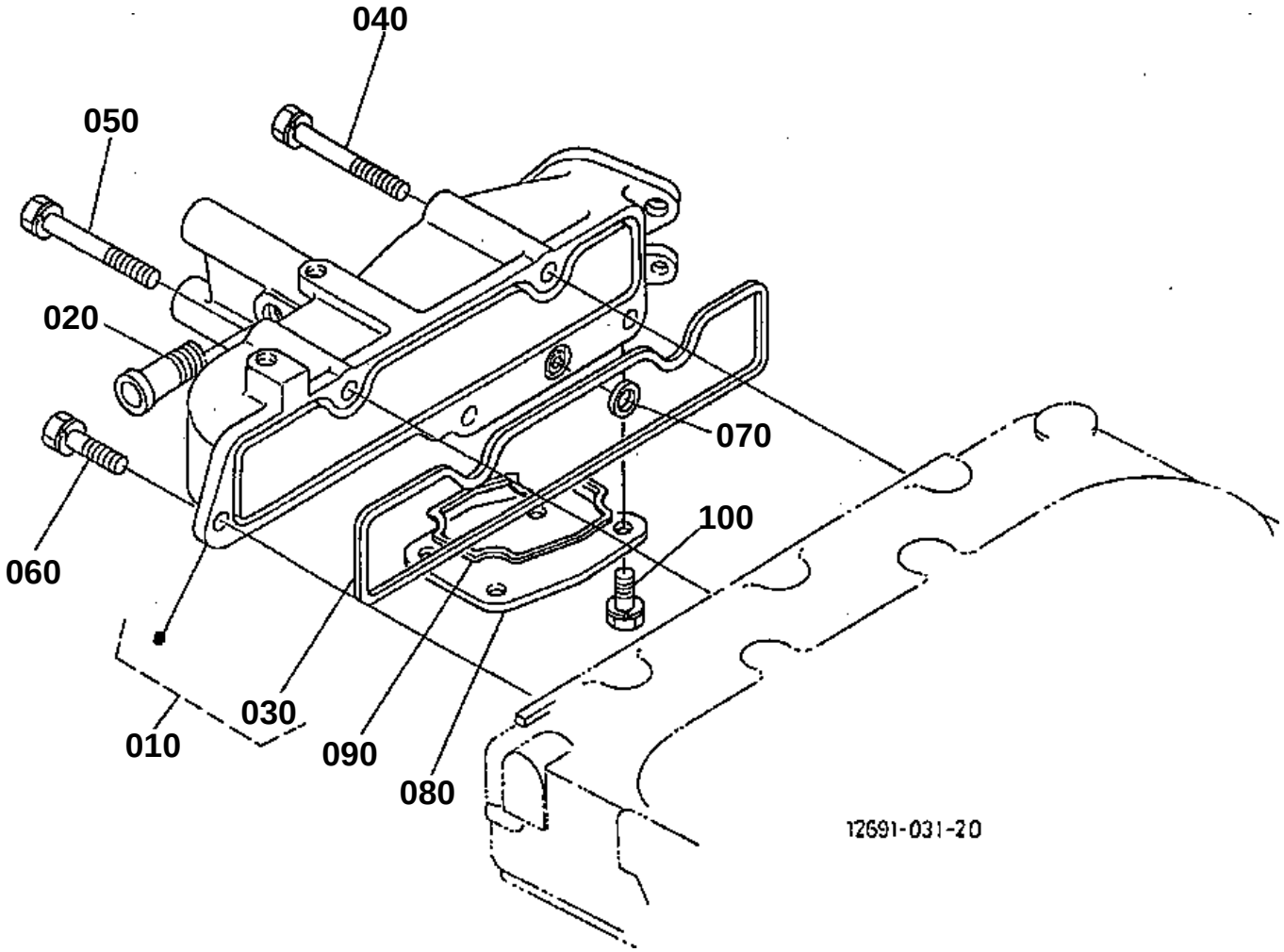
040
050
020
070
100
060
030
010
090
080
12691-031-20

INLET MANIFOLD

↔ Interchangeable; ≠ not interchangeable; ← new for old; → old for new

REF.No	Part No.	Description	Q'ty	S.No.	I/C	REMARKS	Weight (kgf)	Weight (lb)
010	12581-11710	ASSY MANIFOLD INLET	1				0	0
020	15531-73340	PIPE WATER RETURN	1				0.01	0.022
030	12581-11820	GASKET IN-MANIFOLD	1				0.002	0.0044
040	15841-91010	BOLT	2				0.014	0.0308
050	01023-60650	BOLT	1				0.015	0.033
060	01023-50625	BOLT	2				0.007	0.0154
070	12581-11830	GASKET	1				0.002	0.0044
080	12581-11790	COVER	1				0.06	0.132
090	12581-11840	GASKET	1				0.001	0.0022
100	01023-50616	BOLT	4				0.005	0.011

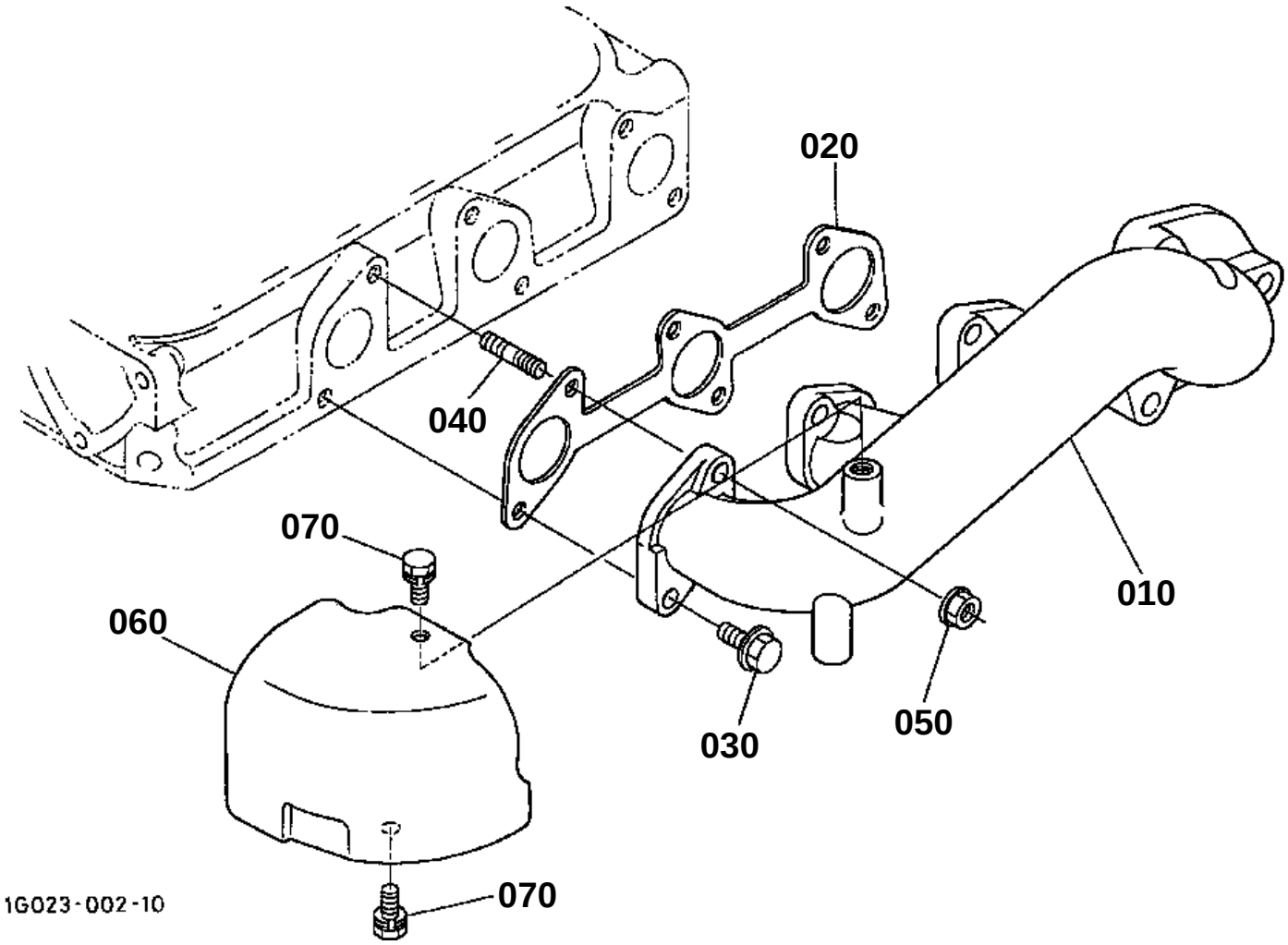
020
040
070
060
010
030
050
070
1G023-002-10

EXHAUST MANIFOLD

↔ Interchangeable; ≠ not interchangeable; ← new for old; → old for new

REF.No	Part No.	Description	Q'ty	S.No.	I/C	REMARKS	Weight (kgf)	Weight (lb)
010	K1211-83210	MANIFOLD EXHAUST	1				1.65	3.63
020	15862-12350	GASKET EX-MANIFOLD	1				0.01	0.022
030	01759-50616	BOLT UBS	3				0.01	0.022
040	01513-50618	STUD	3				0.005	0.011
050	02756-50060	NUT UBS	3				0.001	0.0022
060	15881-12650	COVER HEAT PROOF	1				0.07	0.154
070	01023-50610	BOLT	2				0.005	0.011

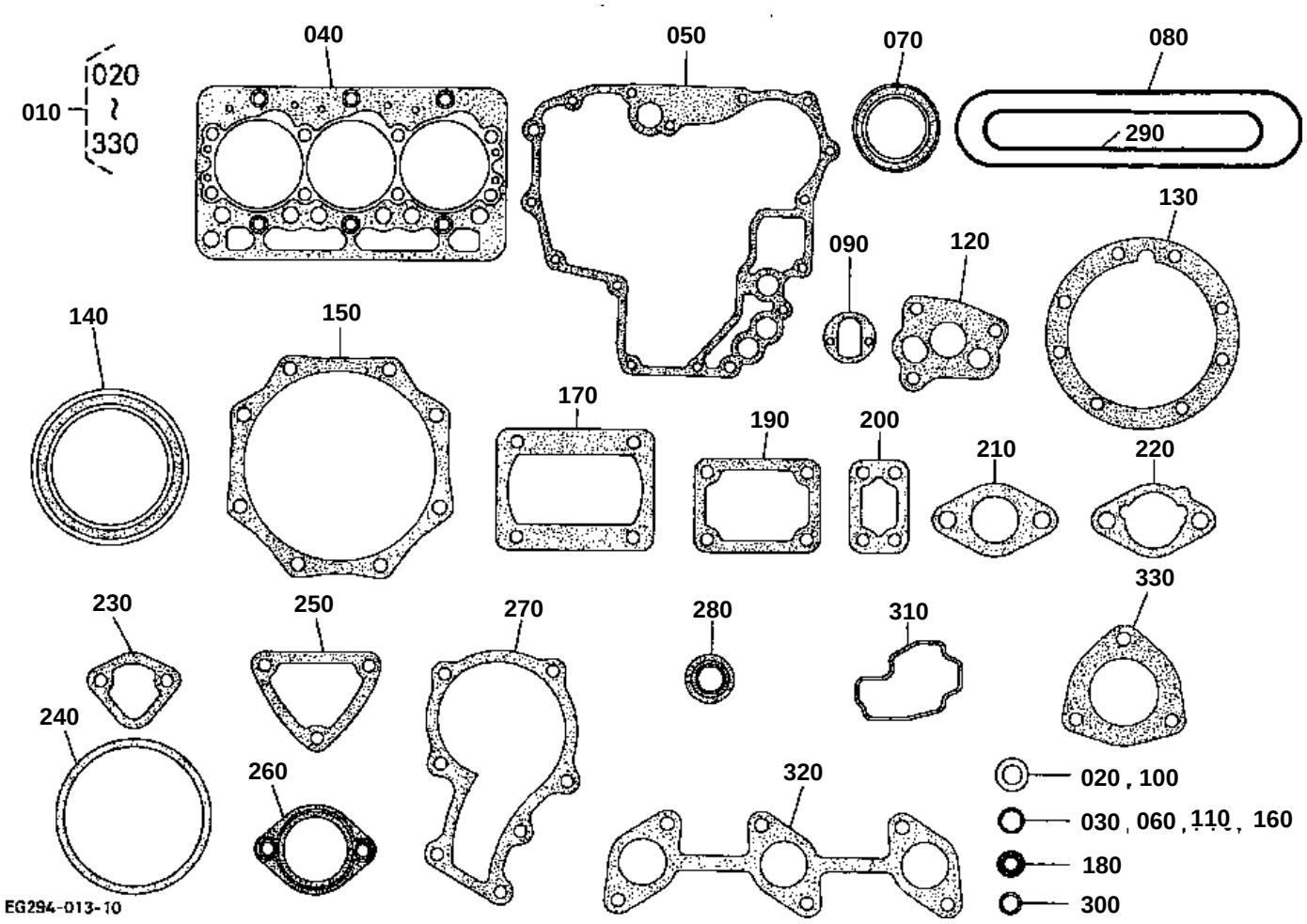
010
020
330
040
050
070
080
290
130
090
120
140
150
170
190
200
210
220
230
250
270
280
310
330
240
260
320
020 , 100
030 , 060 , 110 , 160
180
300
EG294-013-10

GASKET KIT

↔ Interchangeable; ≠ not interchangeable; ← new for old; → old for new

REF.No	Part No.	Description	Q'ty	S.No.	I/C	REMARKS	Weight (kgf)	Weight (lb)
010	07916-25065	OVER HALL GASKET KIT	1				0.28	0.616
020	6C090-58960	GASKET	1				0.002	0.0044
030	04814-00160	O RING	1				0.001	0.0022
040	12691-03310	GASKET CYLINDER HEAD	1				0.04	0.088
050	15862-04132	GASKET GEAR CASE NA	1				0.007	0.0154
060	04814-06130	O RING	3				0.01	0.022
070	15877-04140	SEAL OIL	1				0.011	0.0242
080	16861-14522	GASKET HEAD COVER	1				0.02	0.044
090	17524-05130	GASKET	2				0.001	0.0022
100	15601-96650	GASKET	8				0.001	0.0022
110	04814-50300	O RING	1				0.001	0.0022
120	16851-35152	GASKET OIL PUMP NA	1				0.001	0.0022
130	15852-04360	GASKET BEARING CASE	1				0.005	0.011
140	EG283-04460	SEAL OIL	1				0.03	0.066
150	15841-04822	GASKET	1				0.004	0.0088
160	04814-16220	O RING	1				0.001	0.0022
170	EG281-51660	GASKET	1				0.002	0.0044
180	12581-55850	SEAL OIL	1				0.002	0.0044
190	15841-57212	GASKET CONTROL PLATE	1				0.001	0.0022
200	EG281-56340	GASKET	1				0.001	0.0022
210	12035-46110	GASKET CARBURETOR.NA	2				0.002	0.0044
220	EG261-11510	GASKET AIR CLEANER	1				0.014	0.0308
230	16264-52140	GASKET FUEL PUMP	1				0.001	0.0022
240	12581-68630	GASKET	1				0.004	0.0088
250	15841-72922	GASKET WATER FLANGE	1				0.001	0.0022
260	16851-73270	GASKET THERMOSTAT	1				0.003	0.0066
270	15881-73432	GASKET WATER PUMP NA	1				0.002	0.0044
280	11420-13150	SEAL VALVE STEM	6				0.001	0.0022
290	12581-11820	GASKET IN-MANIFOLD	1				0.002	0.0044
300	12581-11830	GASKET	1				0.002	0.0044
310	12581-11840	GASKET	1				0.001	0.0022
320	15862-12350	GASKET EX-MANIFOLD	1				0.01	0.022
330	15862-12230	GASKET MUFFLER NA	1				0.015	0.033

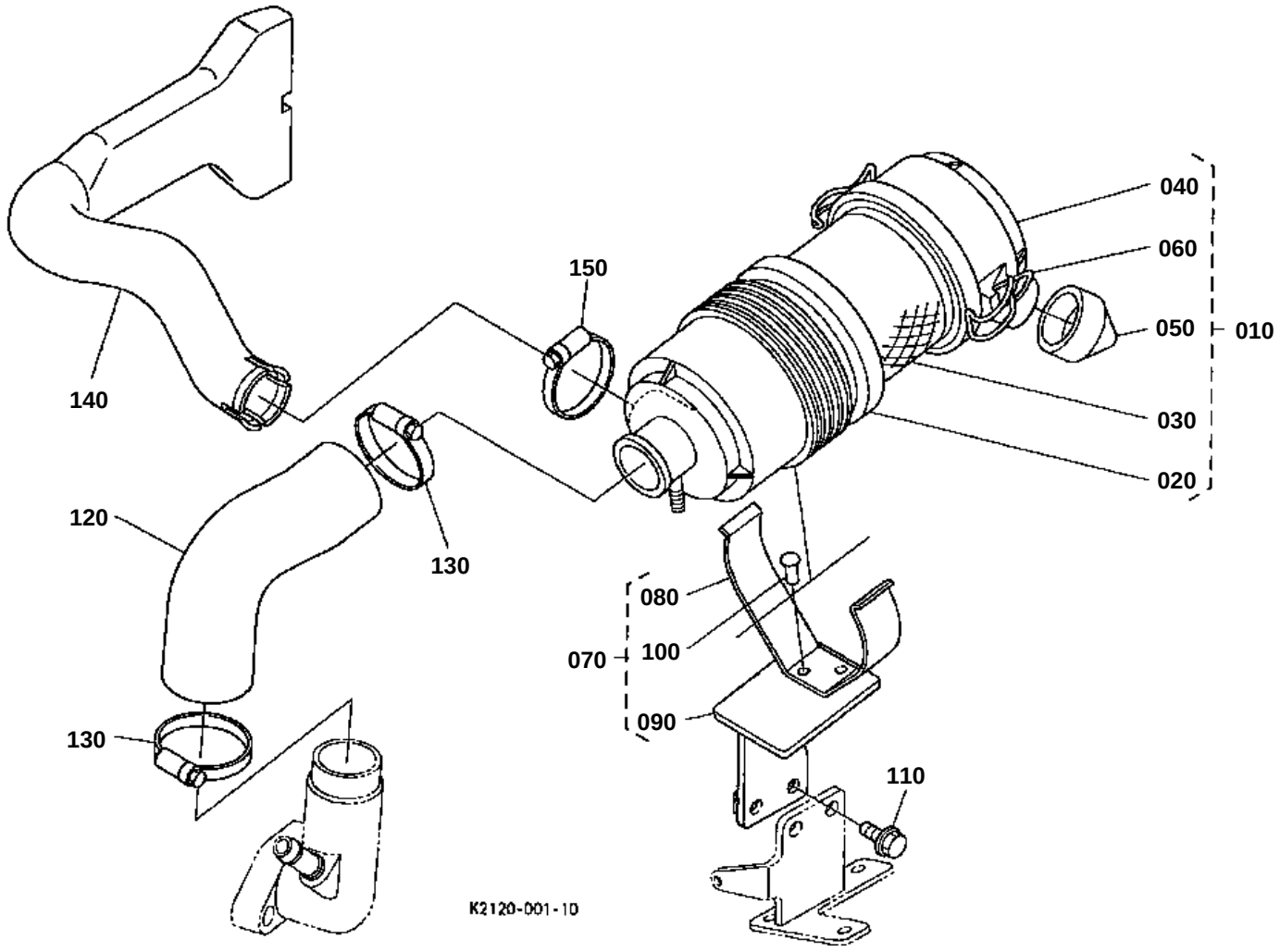
040
060
050
010
030
020
150
140
120
130
080
100
070
090
130
110
K2120-001-10

AIR CLEANER

↔ Interchangeable; ≠ not interchangeable; ← new for old; → old for new

REF.No	Part No.	Description	Q'ty	S.No.	I/C	REMARKS	Weight (kgf)	Weight (lb)
010	K1211-82110	AIR CLEANER ASSY	1				0.57	1.254
020	K1211-82310	BODY	1				0.23	0.506
030	K1211-82320	ELEMENT	1				0.26	0.572
040	K1211-82330	ASSY COVER	1				0.12	0.264
050	K1211-82340	DUST EJECTOR VALVE	1				0.018	0.0396
060	K1211-82350	CLIP	2				0.01	0.022
070	K2120-82210	SUPPORT ASSY(A/C)	1				0.4	0.88
080	K1211-82140	SUPPORT AIR CLEANER	1			NOT SALE	0.09	0.198
090	K2120-82150	BRACKET AIR CLEANER	1				0.3	0.66
100	K1211-82190	RIVET	1			NOT SALE	0.001	0.0022
110	01754-50816	BOLT FLANGE	2				0.011	0.0242
120	K2120-82120	PIPE AIR INLET	1				0.11	0.242
130	K1211-82170	BAND PIPE	2				0.03	0.066
140	K1211-82130	PIPE INTAKE	1				0.21	0.462
150	K1211-82170	BAND PIPE	1				0.03	0.066

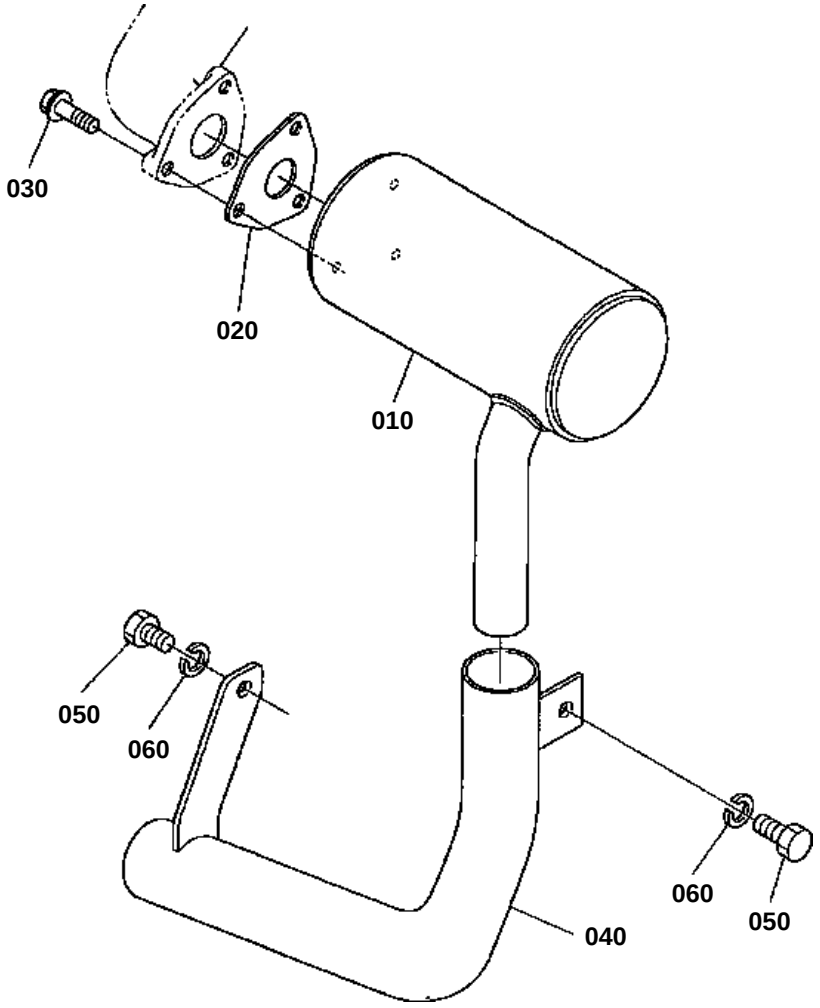

K2120-002-10

MUFFLER

↔ Interchangeable; ≠ not interchangeable; ← new for old; → old for new

REF.No	Part No.	Description	Q'ty	S.No.	I/C	REMARKS	Weight (kgf)	Weight (lb)
010	K2120-83110	MUFFLER ASSY	1				1.78	3.916
020	15862-12230	GASKET MUFFLER NA	1				0.015	0.033
030	01754-50830	BOLT FLANGE	3				0.05	0.11
040	K2120-83120	PIPE MUFFLER	1				1.01	2.222
050	01053-50820	BOLT	2				0.012	0.0264
060	75599-33012	WASHER SPRING	2				0.002	0.0044

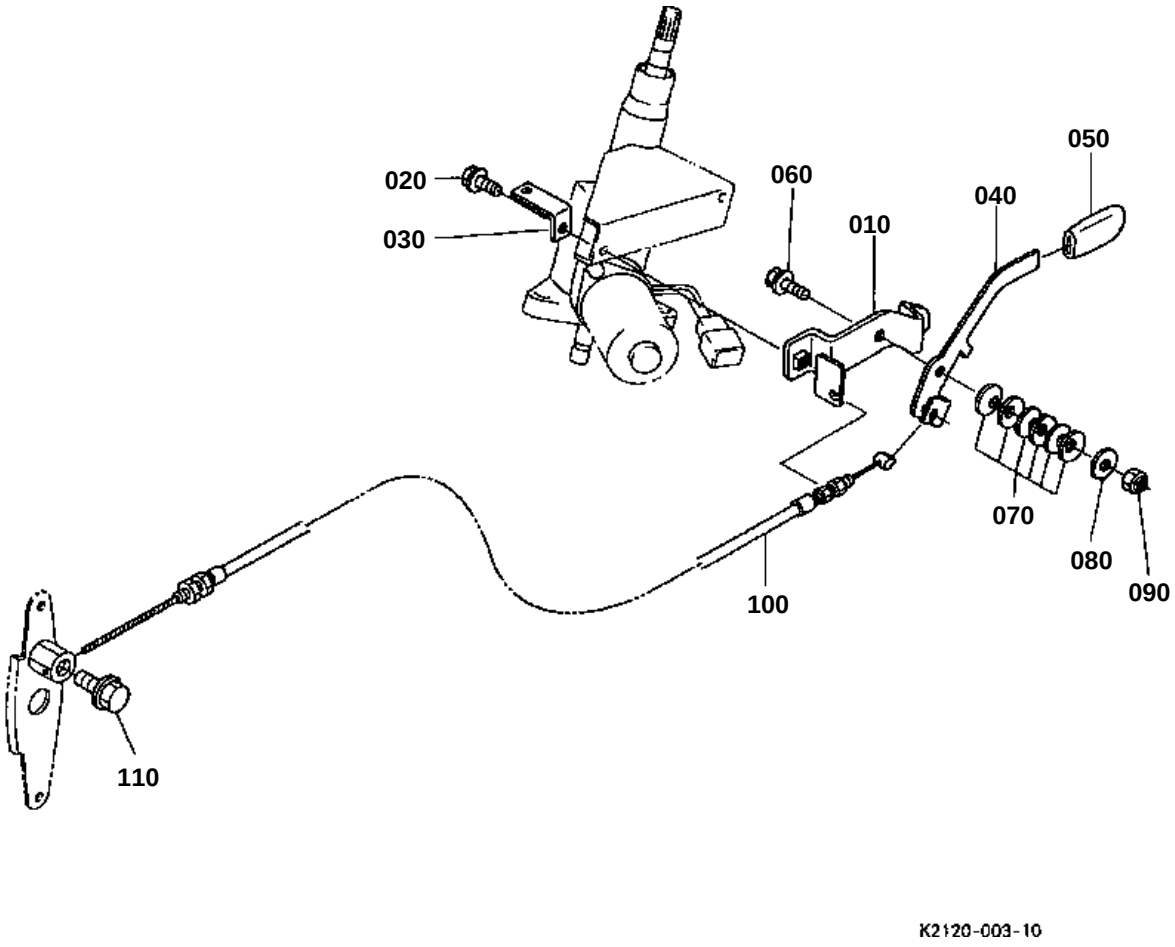
020
030
060
010
040
050
070
080
090
100
110
K2120-003-10

ACCELERATOR LEVER

↔ Interchangeable; ≠ not interchangeable; ← new for old; → old for new

REF.No	Part No.	Description	Q'ty	S.No.	I/C	REMARKS	Weight (kgf)	Weight (lb)
010	K1102-45120	BRACKET ACCEL LEVER	1				0.145	0.319
020	01754-50820	BOLT FLANGE	2				0.015	0.033
030	K1211-45430	PLATE FUSE	1				0.03	0.066
040	K1211-45110	LEVER ACCEL	1				0.07	0.154
050	K1122-45120	GRIP ACCEL	1				0.03	0.066
060	01754-50820	BOLT FLANGE	1				0.015	0.033
070	K1122-89470	DISK SPRING	6				0.001	0.0022
080	K1122-89510	WASHER ATA	1				0.002	0.0044
090	K5112-72840	NUT LOCK	1				0.005	0.011
100	K2120-45150	WIRE ENGINE	1				0.075	0.165
110	01754-50614	BOLT FLANGE	1				0.005	0.011

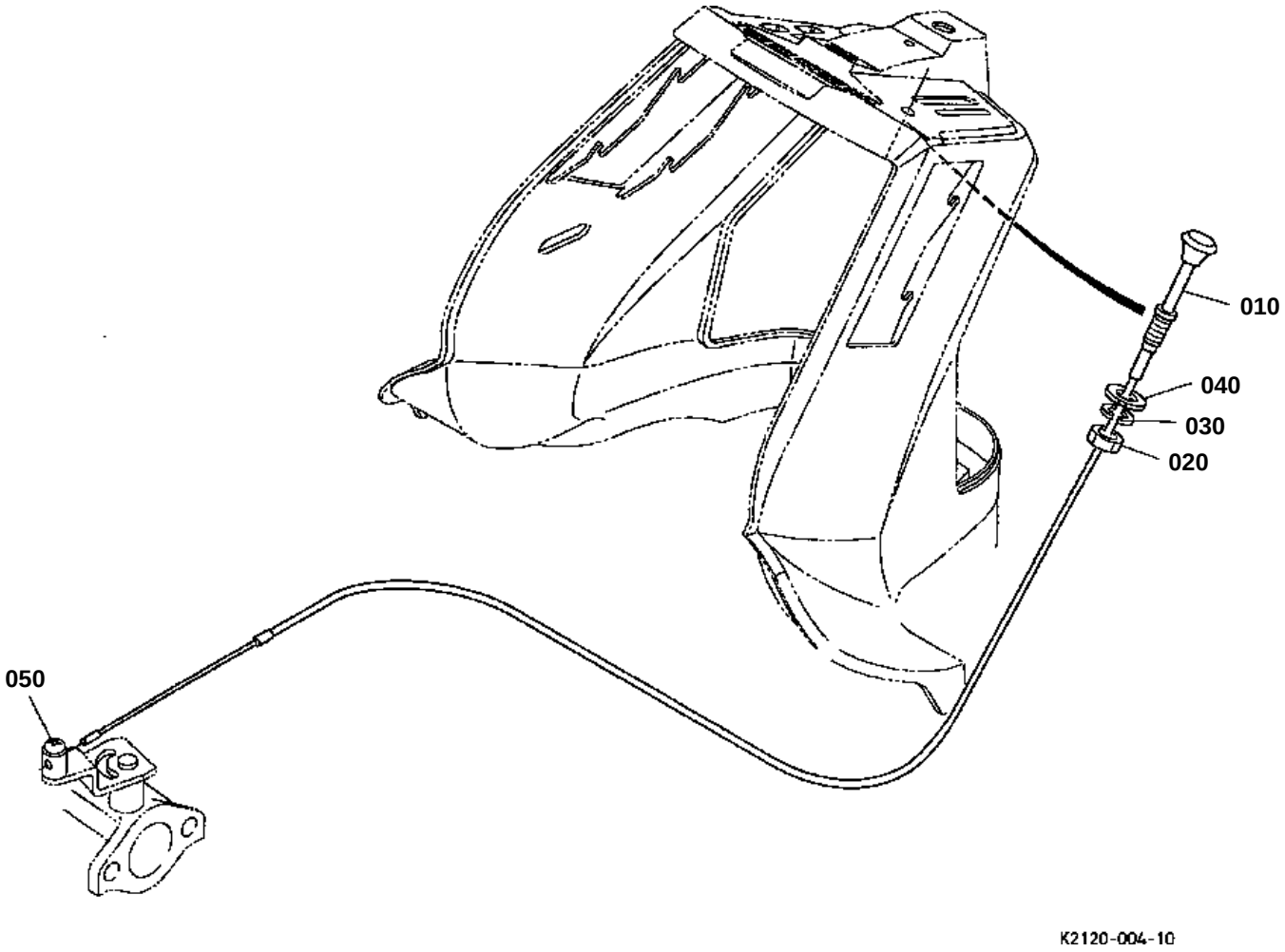
010
040
030
020
050
K2120-004-10

CHOKE WIRE

↔ Interchangeable; ≠ not interchangeable; ← new for old; → old for new

REF.No	Part No.	Description	Q'ty	S.No.	I/C	REMARKS	Weight (kgf)	Weight (lb)
010	K2120-55562	WIRE ASSY CHOKE	1				0	0
020	75599-31043	HEX.JAM NUT	1				0.005	0.011
030	04512-60100	WASHER SPRING	1				0.002	0.0044
040	75599-32013	WASHER PLAIN	1				0.03	0.066
050	03054-50412	SCREW PAN-HEAD	1				0.001	0.0022

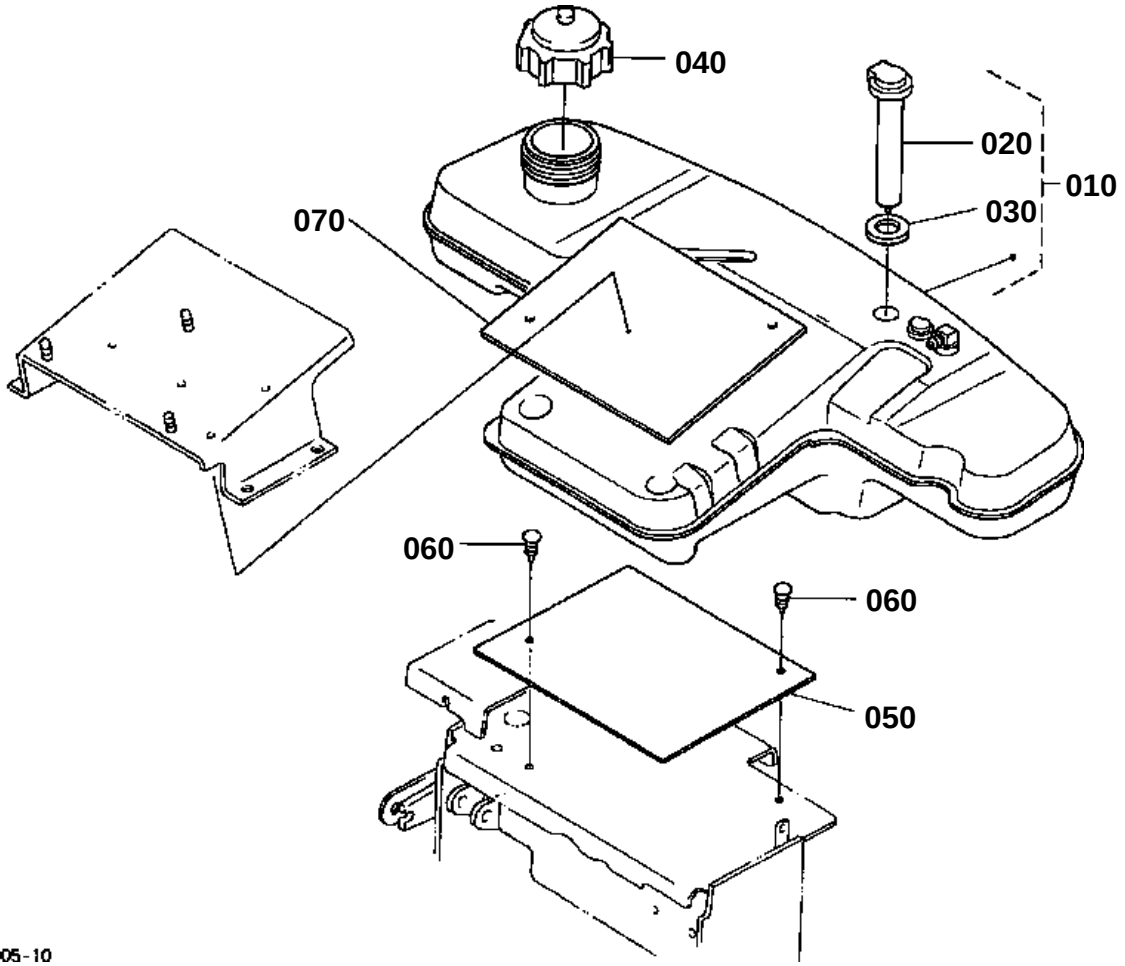
040
020
010
030
070
060
060
050
K2120-005-10

FUEL TANK

↔ Interchangeable; ≠ not interchangeable; ← new for old; → old for new

REF.No	Part No.	Description	Q'ty	S.No.	I/C	REMARKS	Weight (kgf)	Weight (lb)
010	K2120-24100	ASSY TANK FUEL	1				3.8	8.36
020	K1310-24310	GAUGE FUEL	1				0.06	0.132
030	K1310-24320	GROMMET	1				0.006	0.0132
040	K1211-24120	CAP FUEL	1				0.1	0.22
050	K1310-24110	RUBBER(TANK UNDER)	1				0.305	0.671
060	K1211-84560	PUSH RIVET	2				0.002	0.0044
070	K1310-24110	RUBBER(TANK UNDER)	1				0.305	0.671

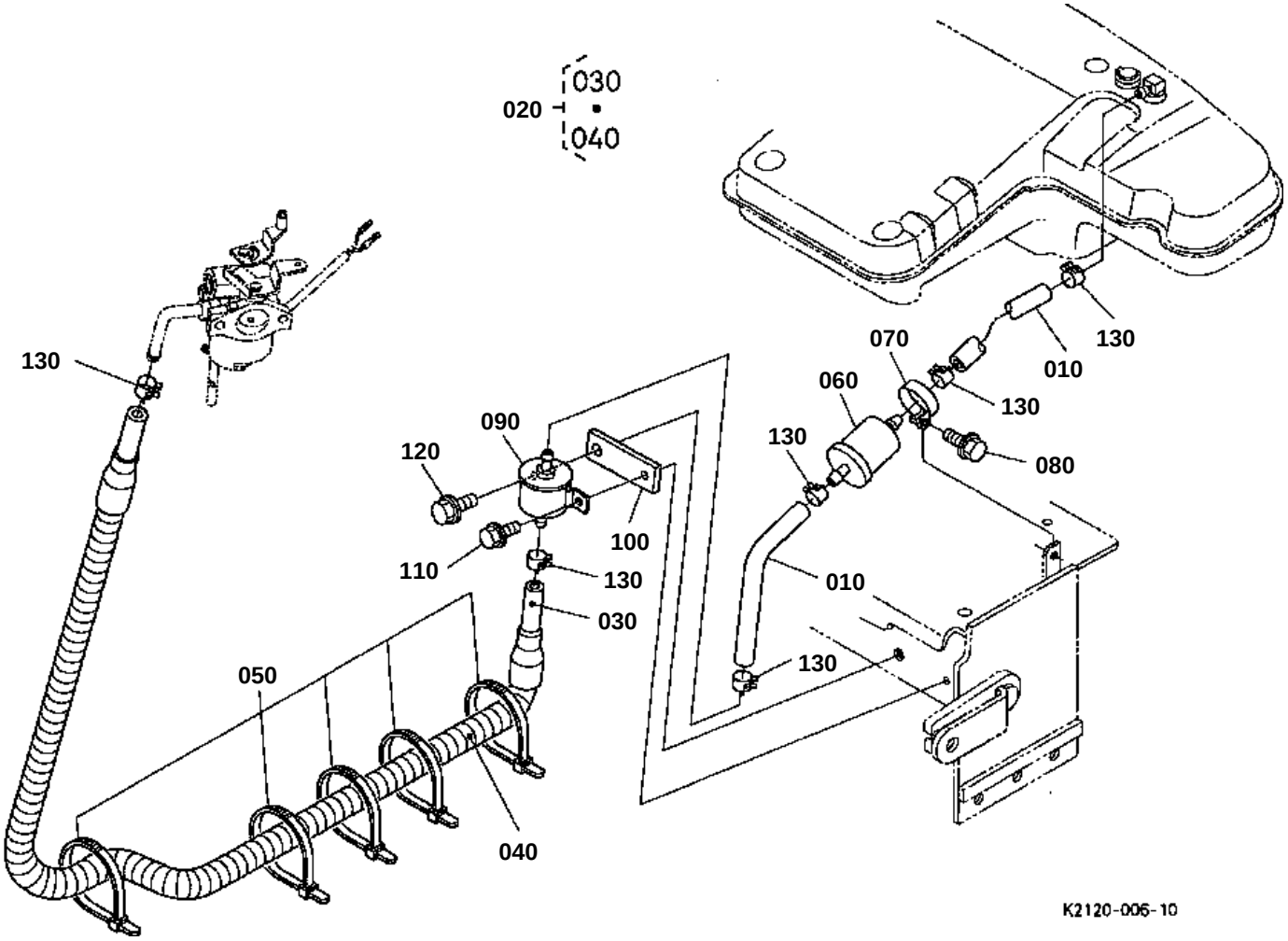
030
020
040
130
070
010
130
060
130
090
130
080
120
100
110
130
010
030
130
050
040
K2120-006-10

↔ Interchangeable; ≠ not interchangeable; ← new for old; → old for new

REF.No	Part No.	Description	Q'ty	S.No.	I/C	REMARKS	Weight (kgf)	Weight (lb)
010	K1310-24430	HOSE FUEL	2				0.032	0.0704
020	K2120-24040	HOSE ASSY FUEL	1				0.3	0.66
030	K2120-24420	HOSE FUEL	1				0.275	0.605
040	K2120-24240	CONVOLUTED CONDUIT	1				0.04	0.088
050	K1122-61230	CLAMP CORD	5				0.001	0.0022
060	12581-43012	ASSY FILTER FUEL	1				0.035	0.077
070	66103-58330	BAND FILTER	1				0.01	0.022
080	01754-50616	BOLT FLANGE	1				0.006	0.0132
090	12692-52030	ASSY PUMP FUEL	1				0.5	1.1
100	K1310-24130	PLATE FUEL PUMP	1				0.13	0.286
110	01754-50625	BOLT FLANGE	1				0.008	0.0176
120	01754-50825	BOLT FLANGE	1				0.01	0.022
130	09318-88125	CLAMP HOSE	6				0.001	0.0022

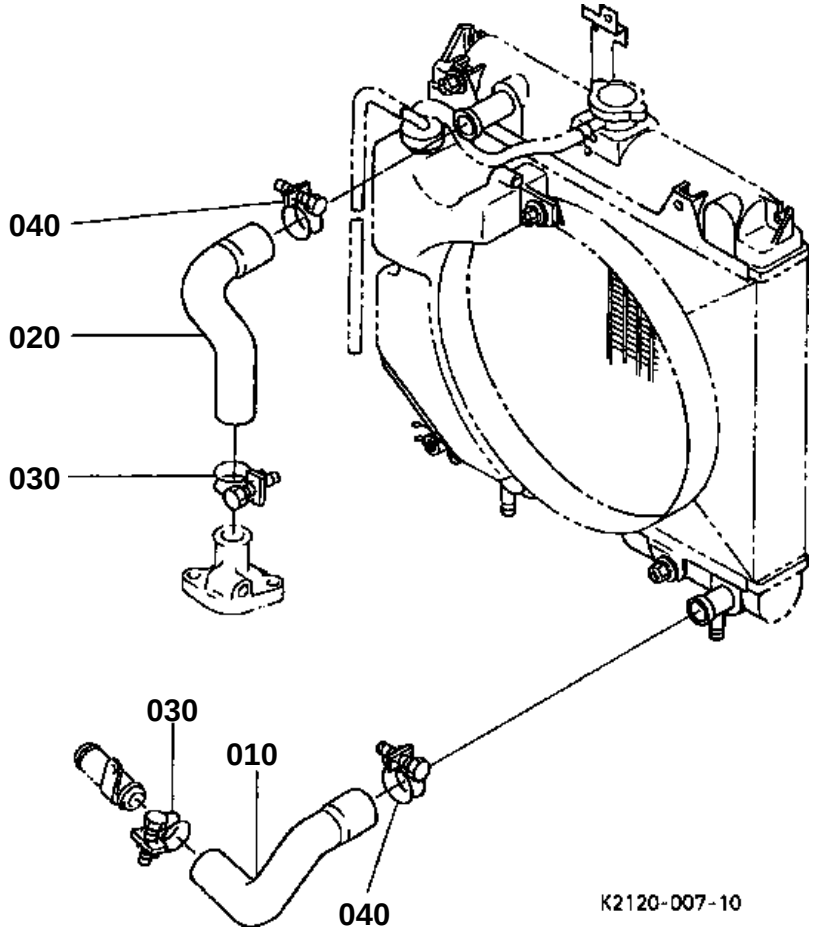
040
020
030
030
010
040
K2120-007-10

WATER PIPE

↔ Interchangeable; ≠ not interchangeable; ← new for old; → old for new

REF.No	Part No.	Description	Q'ty	S.No.	I/C	REMARKS	Weight (kgf)	Weight (lb)
010	K1211-85150	PIPE WATER	1				0.07	0.154
020	K1211-85160	HOSE WATER UPPER	1				0.085	0.187
030	67980-58640	CLAMP HOSE	2				0.02	0.044
040	09318-89036	CLAMP HOSE	2				0.025	0.055

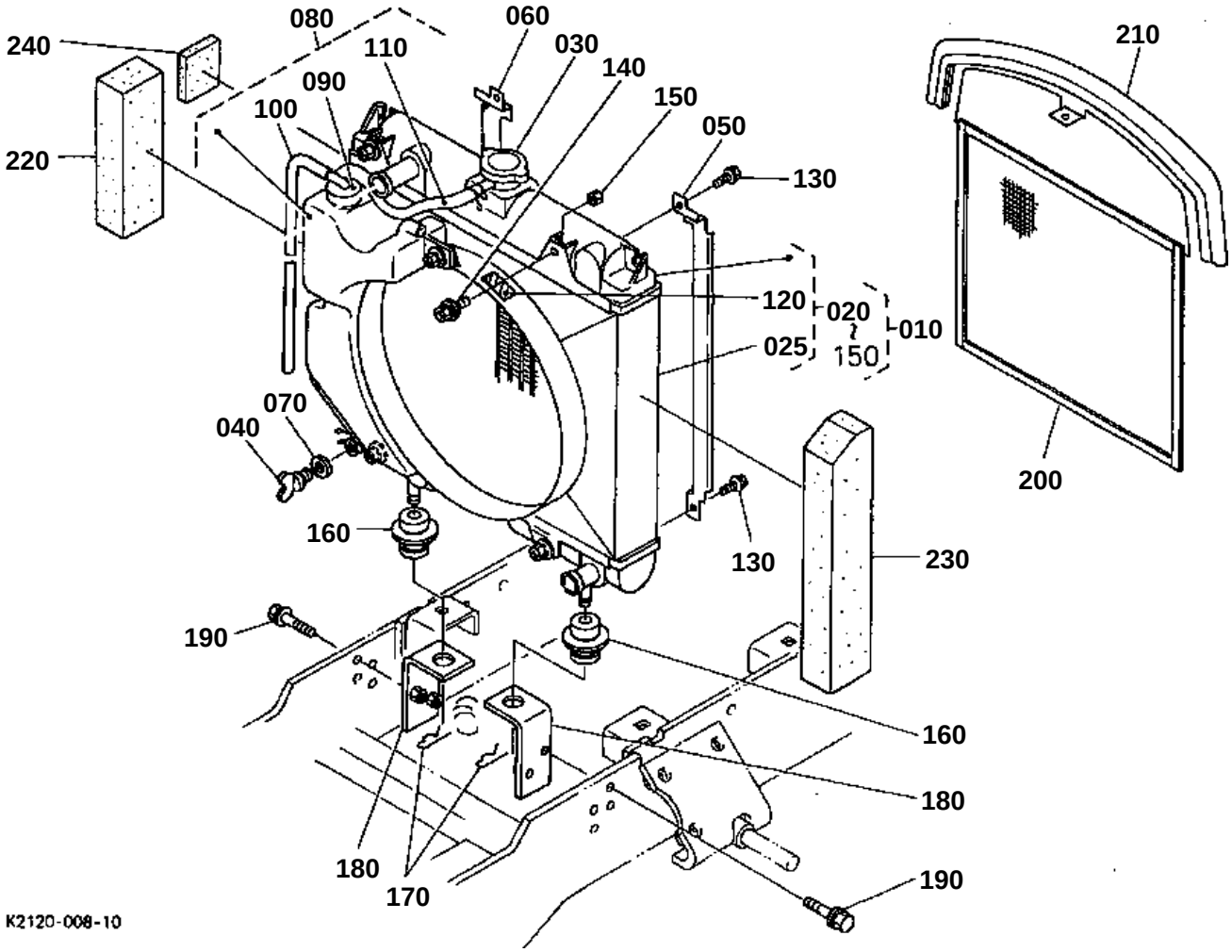
240
080
060
210
110
030
140
090
150
100
050
220
130
120
020
010
025
150
070
040
200
160
130
230
190
160
180
180
170
190
K2120-008-10

RADIATOR

↔ Interchangeable; ≠ not interchangeable; ← new for old; → old for new

REF.No	Part No.	Description	Q'ty	S.No.	I/C	REMARKS	Weight (kgf)	Weight (lb)
010	K2120-95510	KIT RADIATOR	1				5.8	12.76
020	K1211-85012	ASSY RADIATOR	1				4	8.8
025	K1211-85222	SHROUD FAN	1				0.82	1.804
030	56930-25870	ASSY CAP	1				0.04	0.088
040	K2561-85250	COCK DRAIN	1				0.002	0.0044
050	K1211-85230	NET GUIDE RH	1				0.07	0.154
060	K1211-85240	NET GUIDE LH	1				0.07	0.154
070	16851-96690	GASKET	1				0.002	0.0044
080	K1211-85280	ASSY TANK RESERVE	1				0.22	0.484
090	16851-72420	CAP	1				0.05	0.11
100	16851-72440	PIPE OVER FLOW	1				0.04	0.088
110	K1211-85290	PIPE WATER OVER FLOW	1				0.04	0.088
120	K2561-65430	LABEL FAN CAUTION	1			NOT SALE ORDER BY Fig.No.G110-430	0	0
130	16851-93710	SCREW	4				0.03	0.066
140	01205-50614	BOLT	7				0.006	0.0132
150	K1211-85270	NUT	4				0.003	0.0066
160	16851-72190	CUSHION UNDER	2				0.05	0.11
170	75599-56004	PIN SNAP	2				0.01	0.022
180	K1310-85110	STAY RADIATOR	2				0.46	1.012
190	01754-50820	BOLT FLANGE	4				0.015	0.033
200	K1211-84512	NET	1				0.71	1.562
210	K1211-84520	TRIM	1				0.07	0.154
220	K1211-84530	TAPE DUSTPROOF	1				0.01	0.022
230	K1211-84540	TAPE DUSTPROOF	1				0.023	0.0506
240	K1211-84570	CUSHION AIR INTAKE	1				0.01	0.022

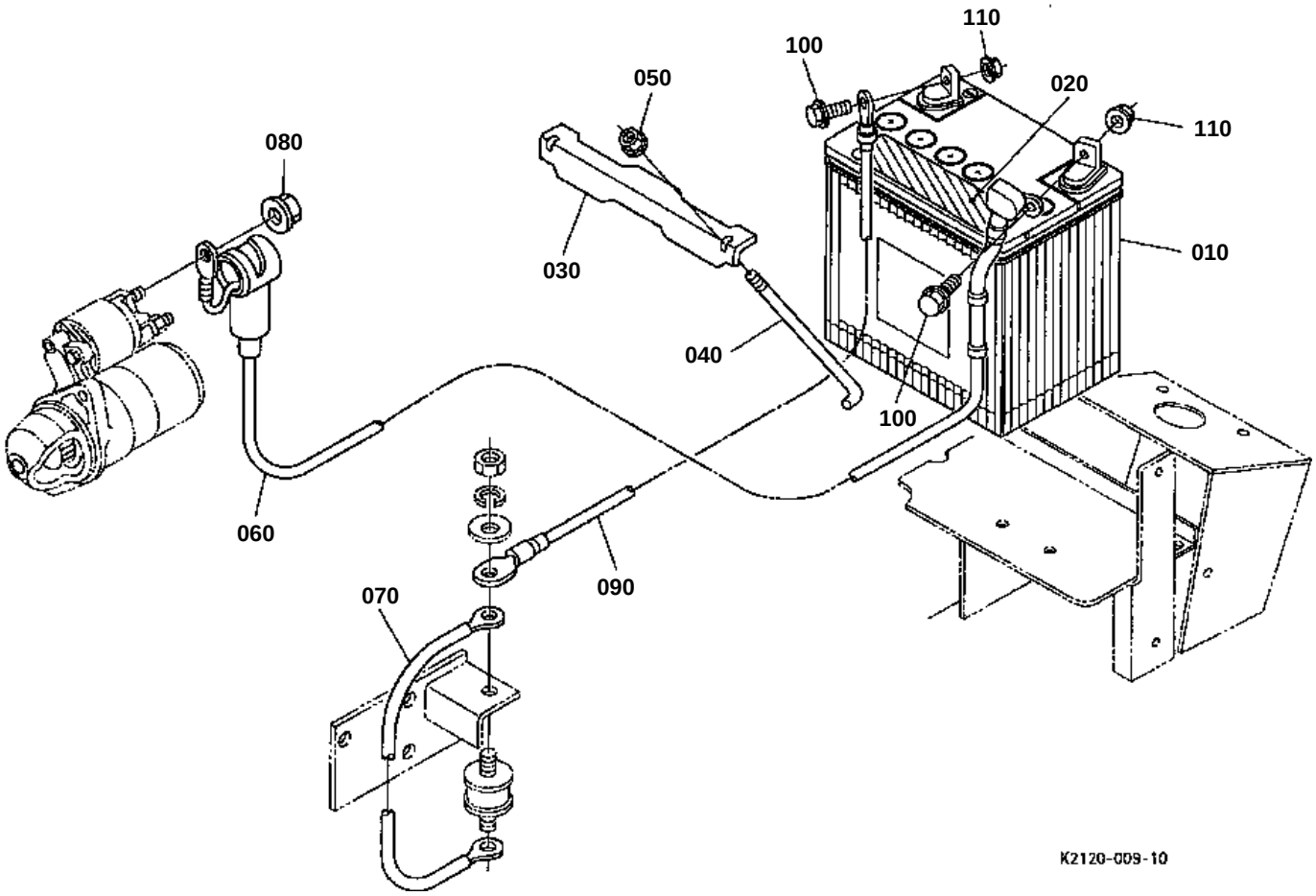
110
100
050
020
110
080
010
030
040
100
060
090
070
K2120-009-10

↔ Interchangeable; ≠ not interchangeable; ← new for old; → old for new

REF.No	Part No.	Description	Q'ty	S.No.	I/C	REMARKS	Weight (kgf)	Weight (lb)
010	K1221-61140	BATTERY MAINT.FREE	1				0	0
020	K1221-61170	LABEL	1				0.001	0.0022
030	K1122-61120	HOLDER BATTERY	1				0.22	0.484
040	K1122-61130	ROD BATTERY	2				0.04	0.088
050	02751-50060	NUT FLANGE	2				0.005	0.011
060	K2120-61310	CABLE BATTERY(+)	1				0.24	0.528
070	K1211-61360	CABLE BATTERY(-)	1				0.05	0.11
080	02751-50080	NUT FLANGE	1				0.006	0.0132
090	K1221-61350	CABLE BATTERY(-)	1				0.11	0.242
100	01754-50616	BOLT FLANGE	2				0.006	0.0132
110	02751-50060	NUT FLANGE	2				0.005	0.011

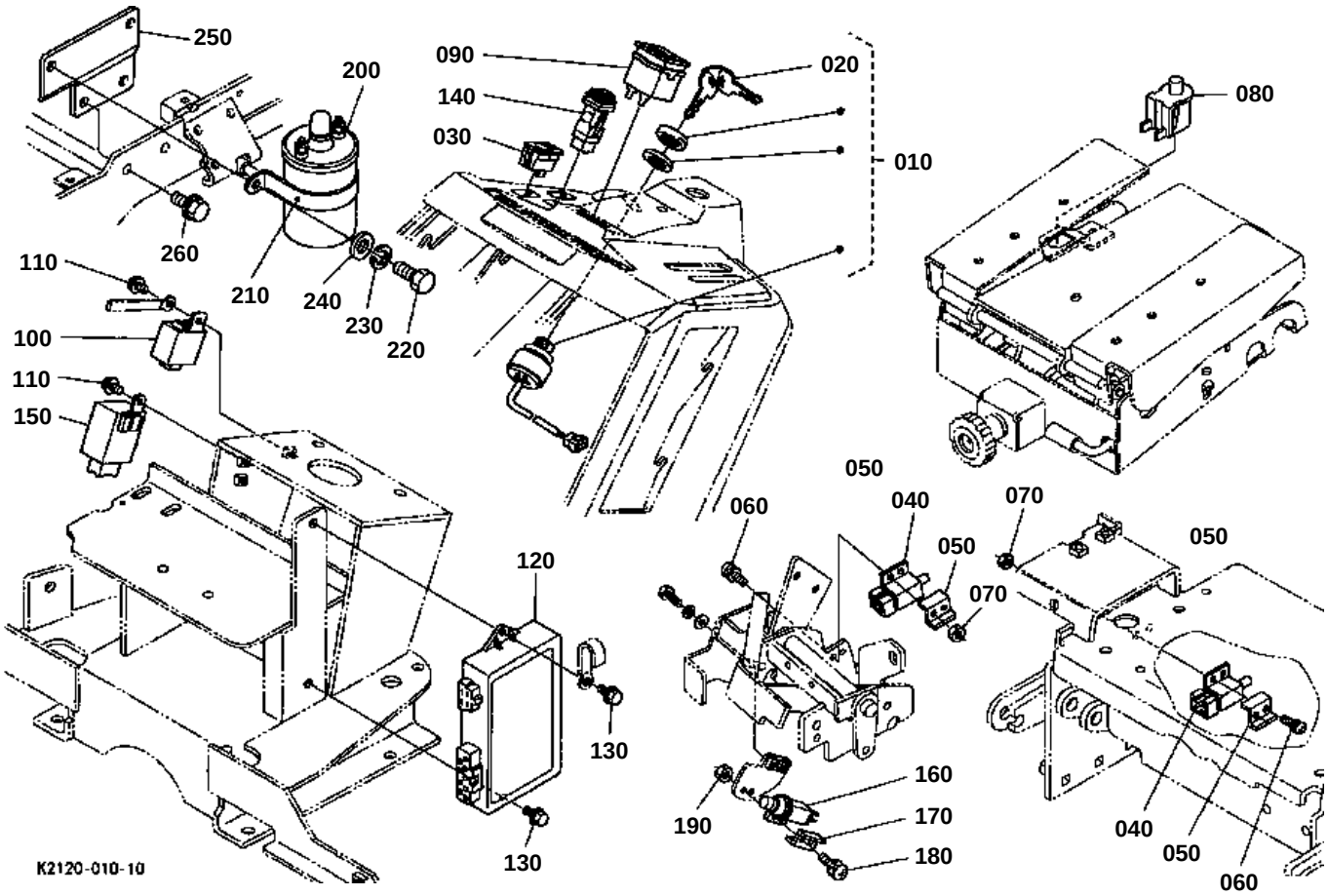
250
200
090
020
140
030
010
080
260
110
210
240
230
220
100
110
150
050
060
040
070
050
050
070
120
130
160
190
170
180
130
040
050
060
K2120-010-10

↔ Interchangeable; ≠ not interchangeable; ← new for old; → old for new

REF.No	Part No.	Description	Q'ty	S.No.	I/C	REMARKS	Weight (kgf)	Weight (lb)
010	66101-55200	ASSY SWITCH STARTER	1				0.3	0.66
020	37410-55150	KEY STARTER	1				0.025	0.055
030	K1122-62210	SWITCH LIGHT	1				0.018	0.0396
040	K1122-62250	SWITCH SAFETY	2				0.02	0.044
050	K1122-62310	RETAINER SWITCH	2				0.003	0.0066
060	03024-50520	SCREW WITH WASHER	4				0.004	0.0088
070	02054-50050	NUT	4				0.002	0.0044
080	K1122-62280	SWITCH SEAT	1				0.011	0.0242
090	K1142-62510	METER HOUR(MASS)	1				0.04	0.088
100	T0070-31410	TIMER KEY STOP	1				0.065	0.143
110	01754-50616	BOLT FLANGE	2				0.006	0.0132
120	K1211-62350	CONTROLER EPS	1				0.79	1.738
130	01754-50616	BOLT FLANGE	2				0.006	0.0132
140	K2110-62810	SWITCH NMR	1				0.019	0.0418
150	K2110-62830	RELAY UNIT NMR	1				0.085	0.187
160	K2110-62840	SWITCH REVERSE	1				0.018	0.0396
170	K1122-62310	RETAINER SWITCH	1				0.003	0.0066
180	03024-50520	SCREW WITH WASHER	2				0.004	0.0088
190	02054-50050	NUT	2				0.002	0.0044
200	12581-68900	COIL IGNITION	1				0.84	1.848
210	12581-68920	BRACKET	1				0.086	0.1892
220	01053-50816	BOLT	2				0.011	0.0242
230	75599-33012	WASHER SPRING	2				0.002	0.0044
240	04013-60080	WASHER PLAIN	2				0.002	0.0044
250	K2120-55530	BRACKET COIL	1				0.235	0.517
260	01754-50820	BOLT FLANGE	2				0.015	0.033

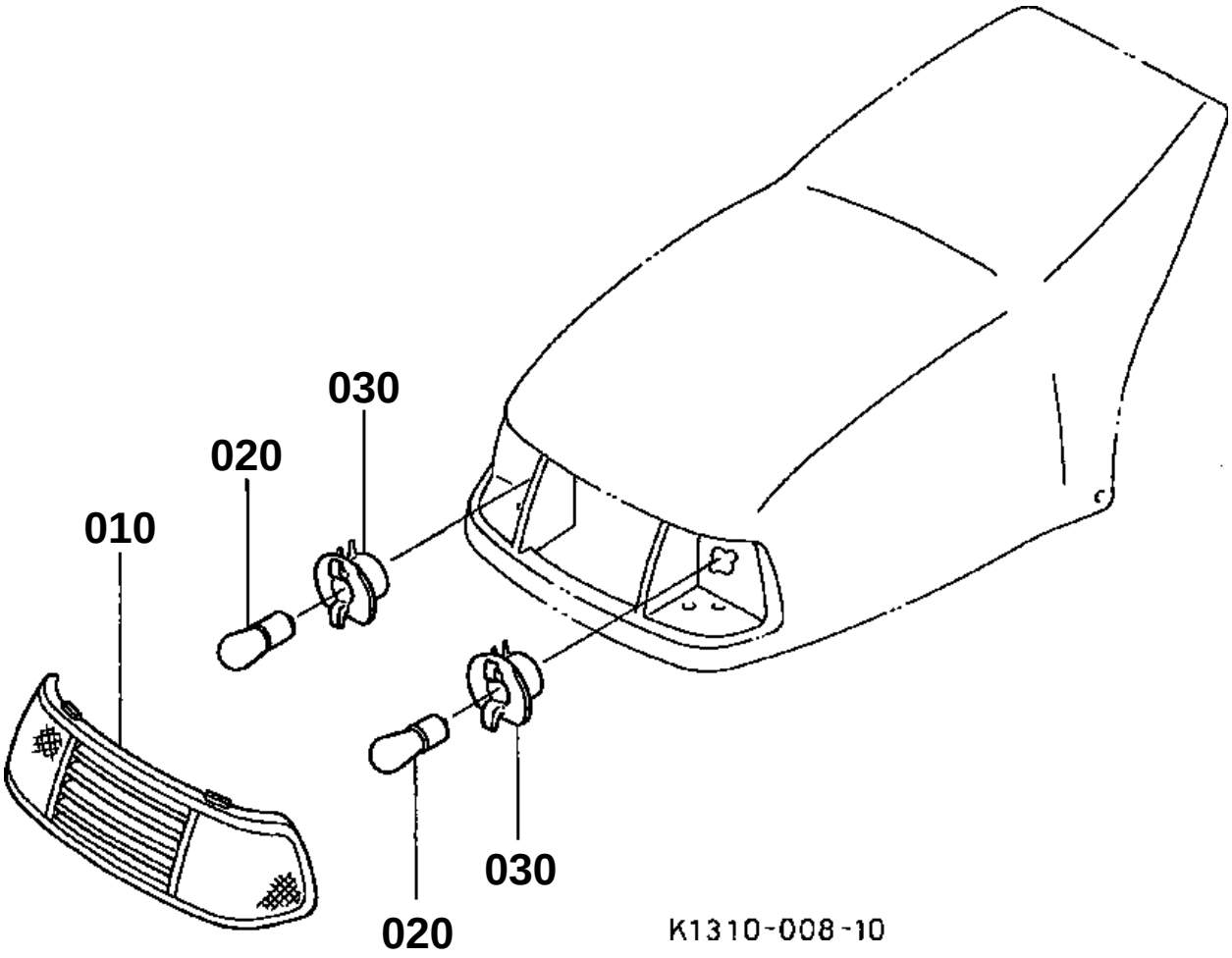
030
020
010
030
020
K1310-008-10

↔ Interchangeable; ≠ not interchangeable; ← new for old; → old for new

REF.No	Part No.	Description	Q'ty	S.No.	I/C	REMARKS	Weight (kgf)	Weight (lb)
010	K1211-54120	LENS	1				0.24	0.528
020	K1122-54210	BULB	2				0.008	0.0176
030	K1122-54220	SOCKET	2				0.006	0.0132

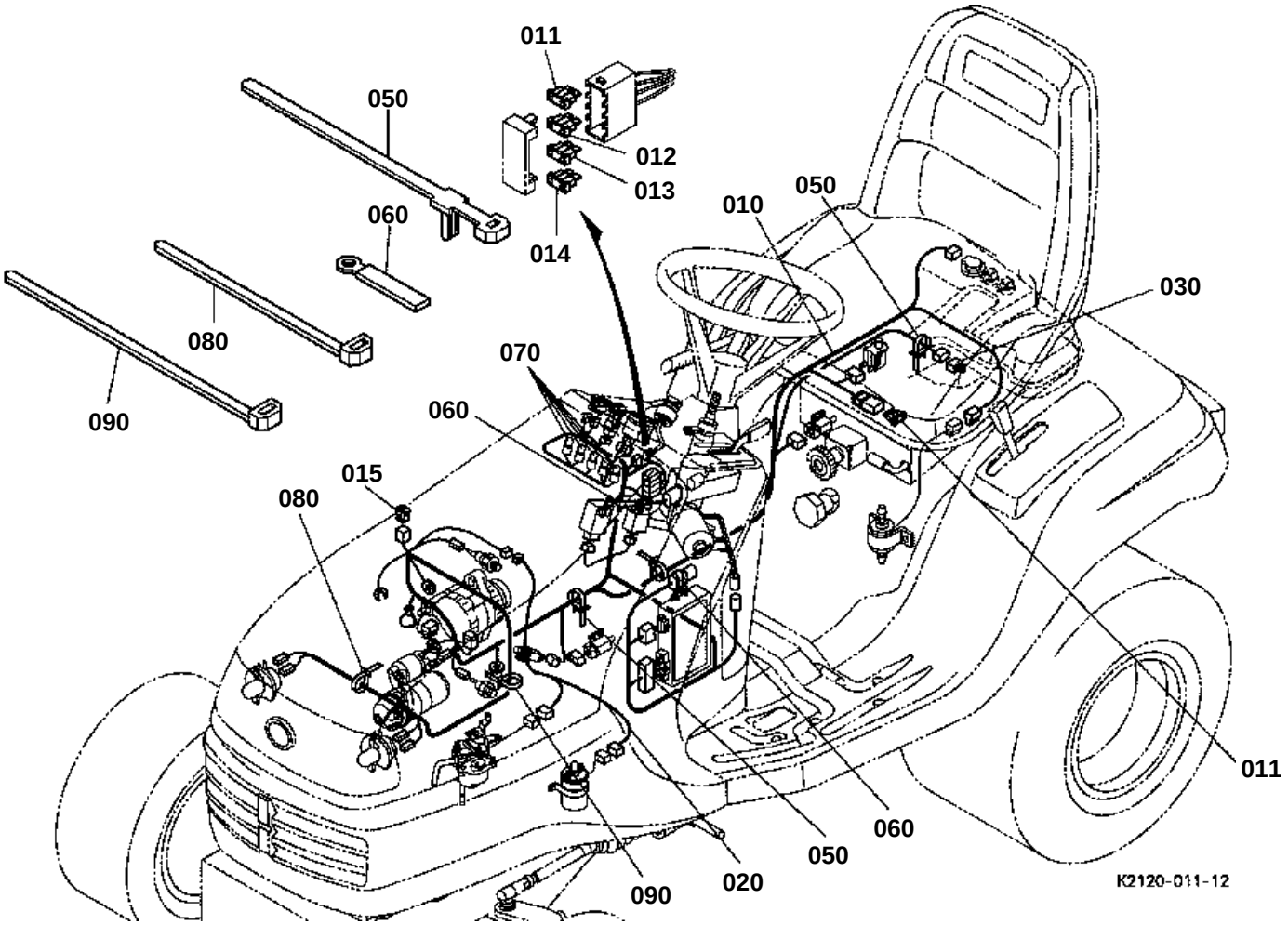
011
050
012
013
014
060
080
090
050
010
030
070
060
015
080
011
060
050
020
090
K2120-011-12

↔ Interchangeable; ≠ not interchangeable; ← new for old; → old for new

REF.No	Part No.	Description	Q'ty	S.No.	I/C	REMARKS	Weight (kgf)	Weight (lb)
010	K2110-61222	ASSY WIRE HARNESS	1				1.56	3.432
011	48200-55870	FUSE AUTO	2			3A	0.001	0.0022
012	48100-55880	FUSE AUTO	1			10A	0.01	0.022
013	35820-75560	FUSE	1			15A	0.002	0.0044
014	5H050-41660	FUSE	1			30A	0.001	0.0022
015	T1060-30520	FUSE	1			40A	0.007	0.0154
020	K2120-61520	WIRE HARNESS GAS	1				0.035	0.077
030	K2110-61610	SHORT CONNECTOR GC	1				0.01	0.022
040	K2120-61620	SHORT CONNECT RELAY	1				0.006	0.0132
050	K1211-61250	CLAMP CORD	5				0.001	0.0022
060	13824-67590	CLAMP CORD	5				0.002	0.0044
070	K1142-62350	BULB	4				0.01	0.022
080	K1122-61230	CLAMP CORD	12				0.001	0.0022
090	K1211-61230	CABLE TIE	1				0.008	0.0176

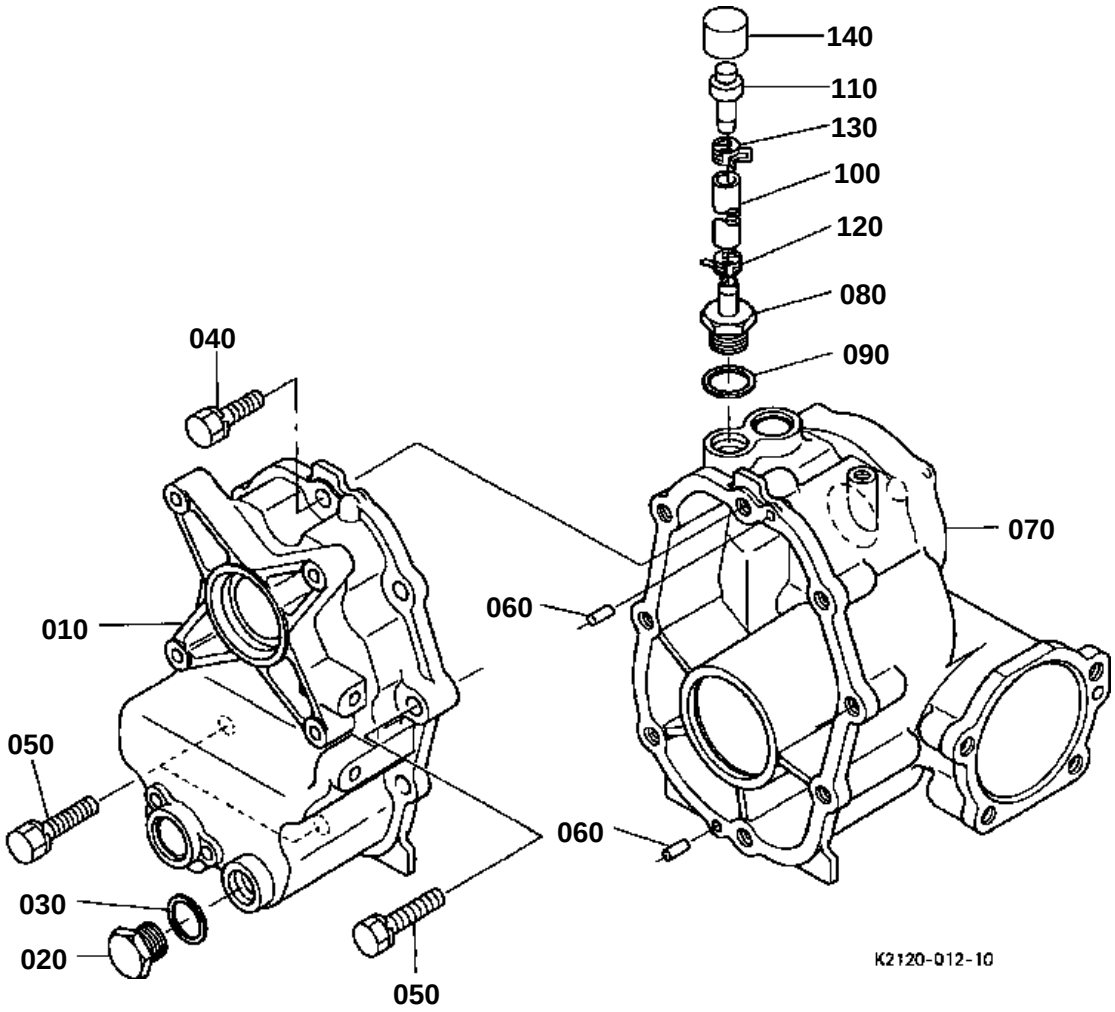
140
110
130
100
120
080
090
040
070
060
010
050
060
030
020
050
K2120-012-10

↔ Interchangeable; ≠ not interchangeable; ← new for old; → old for new

REF.No	Part No.	Description	Q'ty	S.No.	I/C	REMARKS	Weight (kgf)	Weight (lb)
010	K1310-14110	CASE(T/M FRONT)	1				1.32	2.904
020	06331-35020	PLUG	1				0.068	0.1496
030	04717-02000	WASHER WITH RUBBER	1				0.004	0.0088
040	01123-51035	BOLT	5				0.025	0.055
050	01123-51045	BOLT	3				0.032	0.0704
060	05012-00614	PIN STRAIGHT	2				0.004	0.0088
070	K1310-14120	CASE(T/M REAR)	1				7.44	16.368
080	K1310-36780	PLUG	1				0.07	0.154
090	04717-02000	WASHER WITH RUBBER	1				0.004	0.0088
100	K1310-36750	HOSE BREATHER	1				0.02	0.044
110	K2561-36330	BREATHER	1				0.008	0.0176
120	09318-88130	CLAMP HOSE	1				0.002	0.0044
130	09318-88125	CLAMP HOSE	1				0.001	0.0022

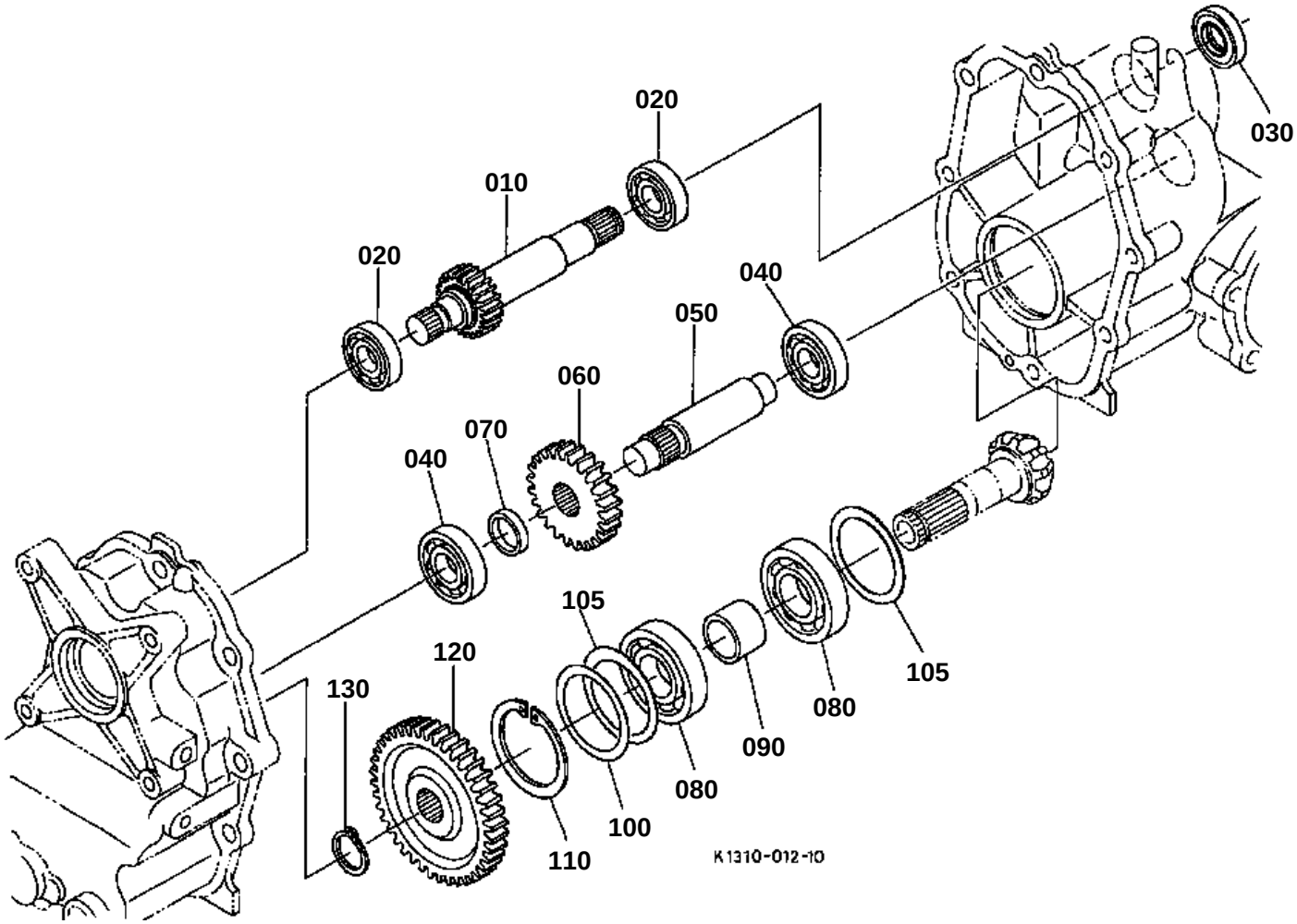
020
010
020
040
050
060
070
040
030
105
120
130
105
080
090
080
100
110
K1310-012-10

BRAKE GEAR-SHAFT/IDLER SHAFT

↔ Interchangeable; ≠ not interchangeable; ← new for old; → old for new

REF.No	Part No.	Description	Q'ty	S.No.	I/C	REMARKS	Weight (kgf)	Weight (lb)
010	K1310-14230	GEAR SHAFT	1			15T	0.58	1.276
020	08101-06004	BEARING BALL	2				0.065	0.143
030	09500-20387	SEAL OIL	1				0.012	0.0264
040	08101-06204	BEARING BALL	2				0.102	0.2244
050	K1310-14240	SHAFT IDLER	1				0.37	0.814
060	K1310-14250	GEAR	1			24T	0.29	0.638
070	K1310-14260	COLLAR(IDLER)	1				0.008	0.0176
080	64441-22170	BEARING BALL	2				0.24	0.528
090	K1310-14340	COLLAR(B.GEAR)	1				0.05	0.11
100	66621-15250	SHIM DIFF.GEAR SHAFT	1			0.5mm	0.003	0.0066
105	66621-15250	SHIM DIFF.GEAR SHAFT	2			0.5mm	0.003	0.0066
105	67211-14990	SHIM DIFF.GEAR SHAFT	2			0.3mm	0.002	0.0044
105	66621-15240	SHIM DIFF.GEAR SHAFT	2			0.2mm	0.001	0.0022
110	04611-00620	CIR CLIP INTERNAL	1				0.011	0.0242
120	K1310-14330	GEAR	1			39T	0.7	1.54
130	15451-95380	CIR CLIP EXTERNAL	1				0.004	0.0088

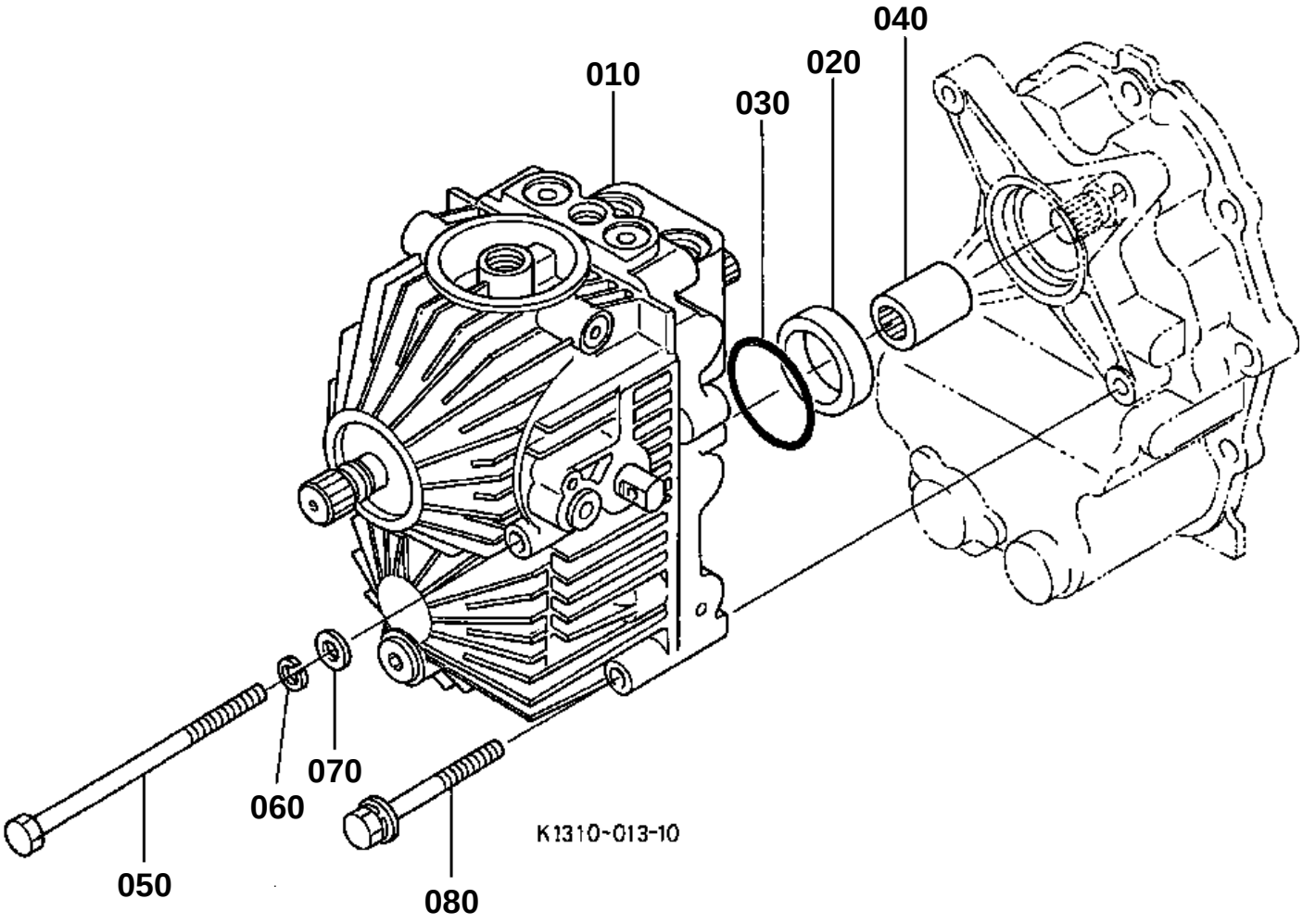
040
020
010
030
070
060
050
080
K1310-013-10

↔ Interchangeable; ≠ not interchangeable; ← new for old; → old for new

REF.No	Part No.	Description	Q'ty	S.No.	I/C	REMARKS	Weight (kgf)	Weight (lb)
010	K1310-11010	ASSY HST	1			REFER TO Fig.No.C405 FOR COMPONENTS.	12.4	27.28
020	66101-36020	COLLAR	1				0.06	0.132
030	04811-06470	O RING	1				0	0
030	04817-06470	O RING	1		←		0.003	0.0066
040	K1310-14220	COUPLING(HST)	1				0.11	0.242
050	K1310-11030	BOLT	2				0.06	0.132
060	04512-60080	WASHER SPRING	2				0.002	0.0044
070	04013-60080	WASHER PLAIN	2				0.002	0.0044
080	01125-50880	BOLT	2				0.035	0.077

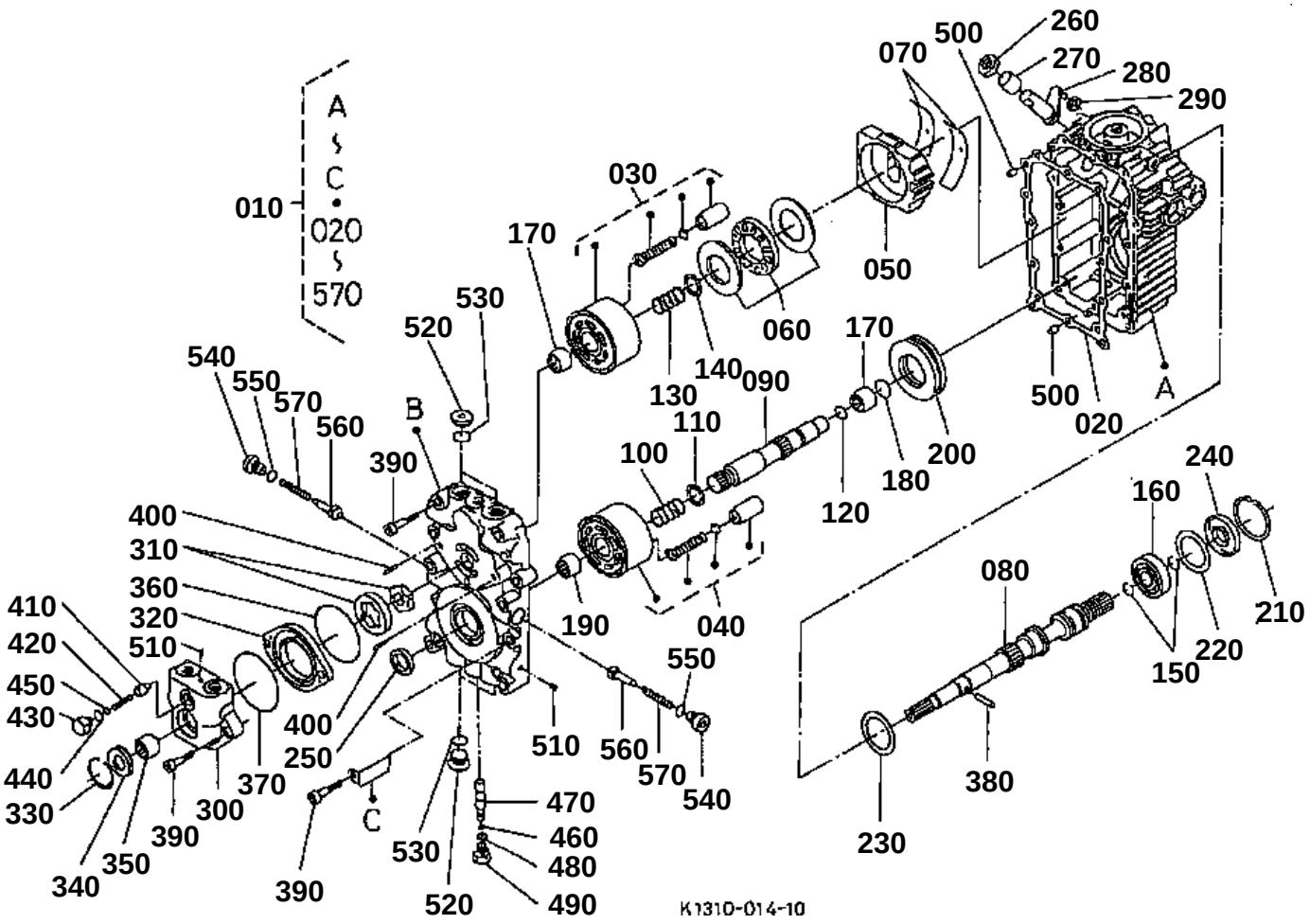
A
~
C
020
~
570
010
030
170
530
520
540
550
570
560
B
390
400
310
360
320
410
420
510
450
430
440
330
340
350
390
300
370
400
250
C
390
530
520
470
460
480
490
190
040
510
560
550
570
540
130
140
090
110
100
060
050
070
500
260
270
280
290
170
120
180
200
500
020
A
240
160
080
210
220
150
380
230
K1310-014-10

↔ Interchangeable; ≠ not interchangeable; ← new for old; → old for new

REF.No	Part No.	Description	Q'ty	S.No.	I/C	REMARKS	Weight (kgf)	Weight (lb)
010	K1310-11010	ASSY HST	1				12.4	27.28
020	66101-36820	GASKET	1				0.005	0.011
030	6C050-98100	KIT CYL-BLOCK PUMP	1				0.92	2.024
040	K2561-14480	KIT CYL-BLOCK MOTOR	1				0.92	2.024
050	66101-37360	SWASHPLATE	1				0.68	1.496
060	66101-37140	BEARING THRUST BALL	1				0.22	0.484
070	66101-37320	BEARING CRADLE	2			NOT SALE	0.02	0.044
070	6C050-98752	BEARING CRADLE	2		←		0.001	0.0022
080	K1310-81350	SHAFT PUMP	1				0.5	1.1
090	K1310-81130	SHAFT MOTOR	1				0.285	0.627
100	66101-37070	SPRING	1				0.005	0.011
110	66101-37060	WASHER PLAIN	1				0.001	0.0022
120	66101-37020	CLIP	1				0.001	0.0022
130	6C050-98170	SPRING	1				0.013	0.0286
140	6C050-98190	WASHER	1				0.002	0.0044
150	K3511-38620	RING RETAINING	2				0.001	0.0022
160	6C050-98230	BEARING BALL	1				0.08	0.176
170	66101-37080	BEARING NEEDLE	2				0.015	0.033
180	66101-37230	PLATE	1				0.003	0.0066
190	66101-37240	BEARING NEEDLE	1				0.017	0.0374
200	66101-37220	BEARING THRUST BALL	1				0.25	0.55
210	6C050-98220	CIR-CLIP	1				0.006	0.0132
220	K3511-38590	SPACER	1				0.005	0.011
230	K3511-38610	SPACER	1				0.01	0.022
240	K1310-81190	SEAL OIL	1				0.016	0.0352
250	66101-36780	SEAL OIL	1				0.01	0.022
260	66101-36720	SEAL OIL	1				0.007	0.0154
270	66101-37340	BEARING JOURNAL	1				0.02	0.044
280	66101-37330	ARM TRUNNION	1				0.075	0.165
290	66071-36250	GUIDE THROTTLE	1				0.005	0.011
300	66101-36970	HOUSING	1				0.94	2.068
310	66101-36880	ASSY GEROTOR	1				0.065	0.143
320	66101-36920	PLATE SPACER	1				0.135	0.297
330	66101-37110	CIR CLIP INTERNAL	1				0.002	0.0044
340	66101-36810	SEAL OIL	1				0.008	0.0176
350	66101-37120	BEARING NEEDLE	1				0.015	0.033
360	66101-36910	O RING	1				0.003	0.0066
370	66101-36890	O RING	1				0.003	0.0066
380	66101-37130	PIN	1				0.002	0.0044
390	66071-36640	SCREW	10				0.017	0.0374
400	66101-37540	PIN	2				0.002	0.0044
410	66101-36930	CONE RELIEF VALVE	1				0.007	0.0154
420	K2561-14840	SPRING	1				0.001	0.0022
430	66101-36960	PLUG	1				0.015	0.033
440	66101-36790	O RING	1				0.002	0.0044
450	66101-36950	SHIM	1				0.002	0.0044
460	66071-83750	O RING	1				0.001	0.0022
470	66101-37410	SPOOL	1				0.02	0.044
480	66071-83760	O RING	1				0.001	0.0022
490	66071-36610	PLUG	1				0.013	0.0286
500	66071-36580	PIN STRAIGHT	2				0.002	0.0044
510	6C050-98470	PLUG	2				0.001	0.0022
520	66101-36730	PLUG SOCKET HEAD	6				0.025	0.055
530	66101-36740	O RING	6				0.002	0.0044
540	66101-36870	PLUG	2				0.02	0.044
550	66101-36750	O RING	2				0.002	0.0044
560	66101-36850	ORIFICE CHECK	2				0.01	0.022
570	66101-36860	SPRING CHECK	2				0.005	0.011

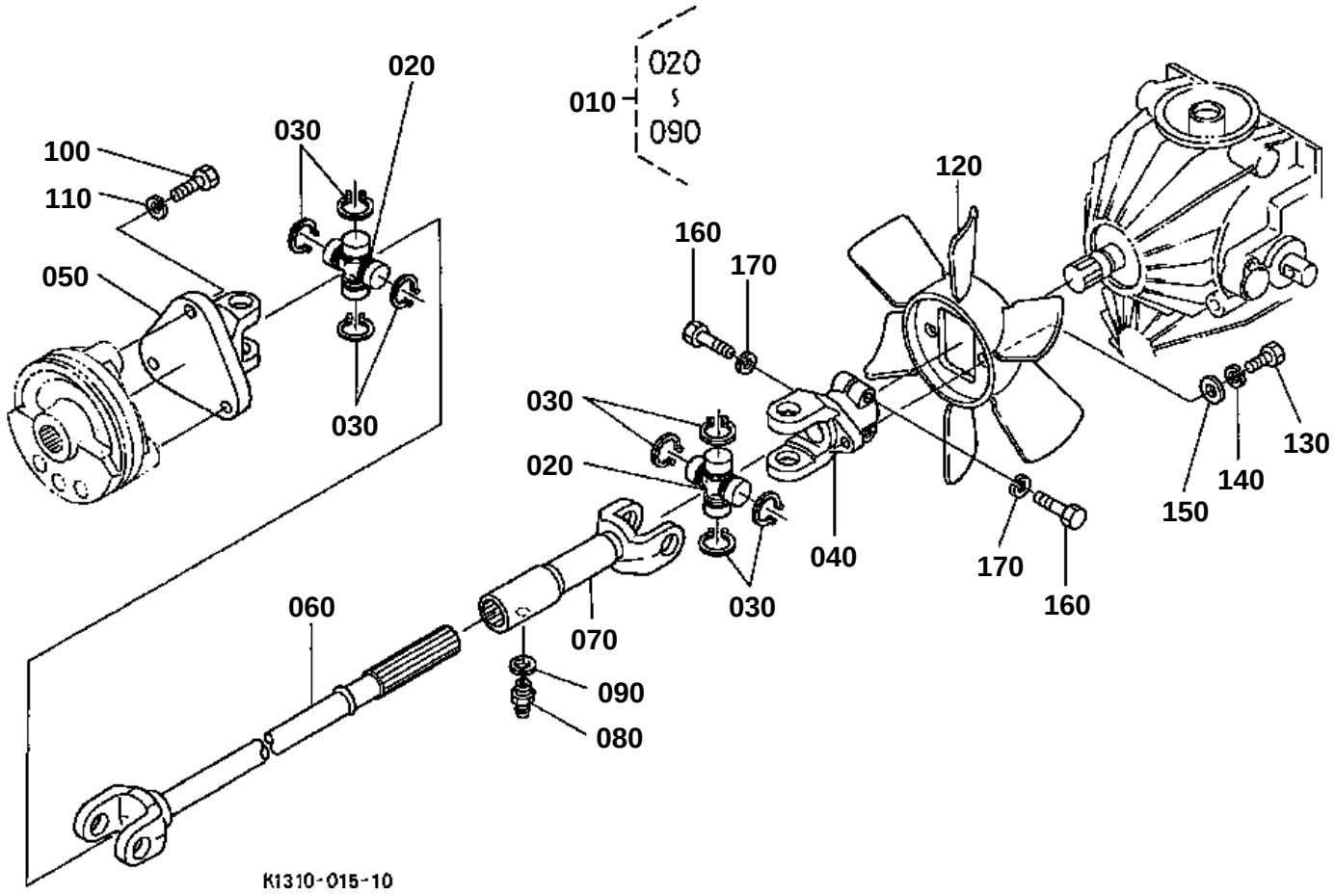
020
010
090
020
030
100
110
050
030
120
160
170
030
020
040
170
160
150
140
130
060
070
030
090
080
K1310-015-10

UNIVERSAL JOINT/HST FAN

↔ Interchangeable; ≠ not interchangeable; ← new for old; → old for new

REF.No	Part No.	Description	Q'ty	S.No.	I/C	REMARKS	Weight (kgf)	Weight (lb)
010	K1310-13510	ASSY JOINT UNIVERSAL	1				2.8	6.16
020	37410-13722	KIT JOINT	2				0.18	0.396
030	37410-13760	CIR-CLIP	8				0.002	0.0044
040	K3511-13520	YOKE CLAMP	1				0.003	0.0066
050	K3511-13530	YOKE FLANGE	1				0.46	1.012
060	K1310-13540	SHAFT SPLINE	1				1.4	3.08
070	K3511-13550	ASSY YOKE	1				0.42	0.924
080	67211-42940	NIPPLE GREASE	1				0.001	0.0022
090	04012-50060	WASHER PLAIN	1				0.001	0.0022
100	01053-50825	BOLT	3				0.014	0.0308
110	75599-33012	WASHER SPRING	3				0.002	0.0044
120	66091-13550	FAN HST	1				0.09	0.198
130	01053-50818	BOLT	2				0.011	0.0242
140	75599-33012	WASHER SPRING	2				0.002	0.0044
150	75599-32012	WASHER PLAIN	2				0.002	0.0044
160	01053-50830	BOLT	2				0.015	0.033
170	75599-33012	WASHER SPRING	2				0.002	0.0044

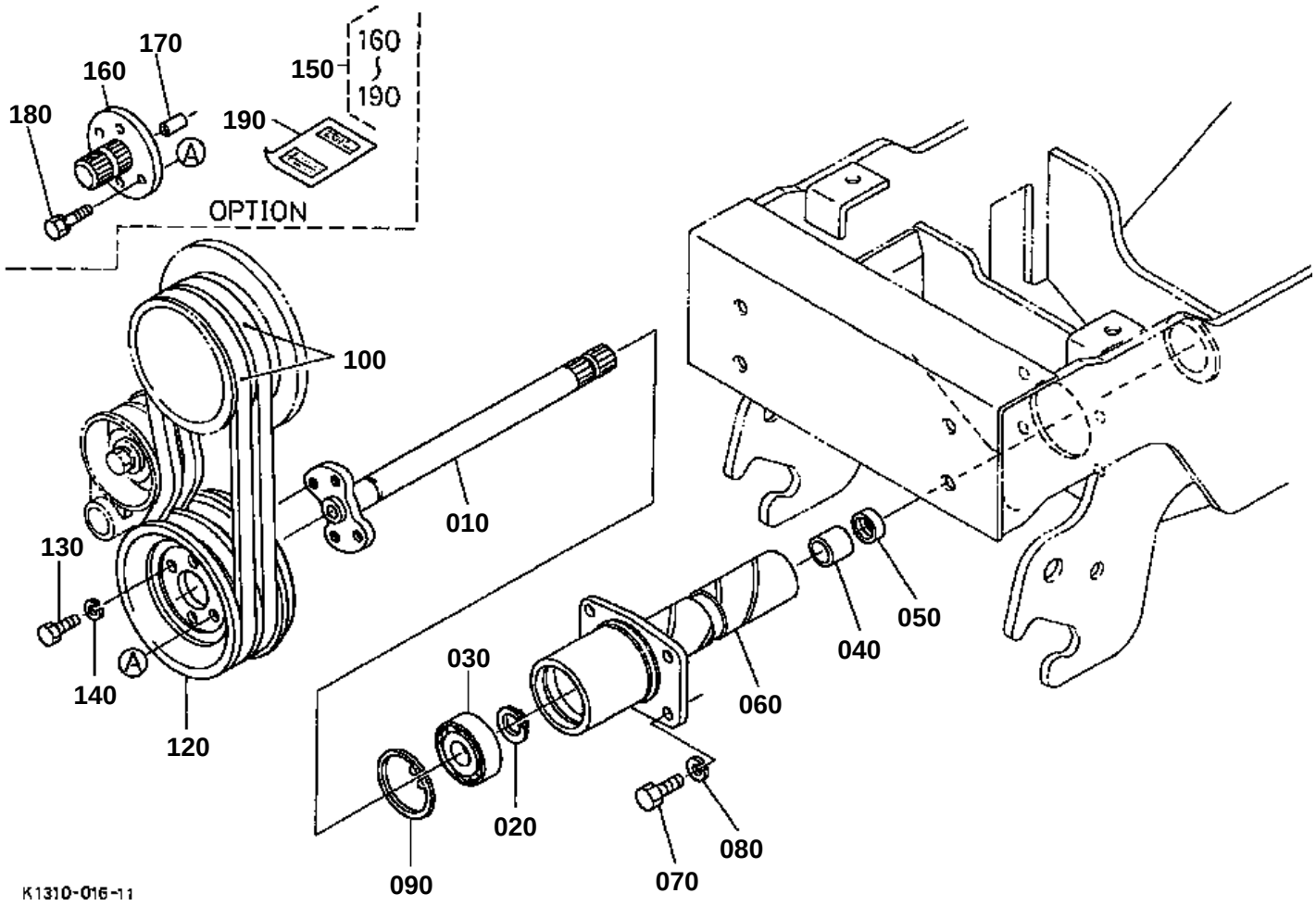
170
160
150
160
~
190
180
190
OPTION
100
010
130
140
120
030
020
090
070
080
060
040
050
K1310-016-11

↔ Interchangeable; ≠ not interchangeable; ← new for old; → old for new

REF.No	Part No.	Description	Q'ty	S.No.	I/C	REMARKS	Weight (kgf)	Weight (lb)
010	K1310-25010	SHAFT PTO	1				1.19	2.618
020	04612-00250	CIR CLIP EXTERNAL	1				0.002	0.0044
030	08131-06205	BEARING BALL	1				0.13	0.286
040	08812-53220	BEARING NEEDLE	1				0.03	0.066
050	66101-25030	SEAL OIL	1				0.01	0.022
060	K1310-25000	SUPPORT FRONT AXLE	1				1.58	3.476
070	01053-51025	BOLT	4				0.025	0.055
080	04512-60100	WASHER SPRING	4				0.002	0.0044
090	04611-00520	CIR CLIP INTERNAL	1				0.009	0.0198
100	K2110-25030	ASSY BELT V(W)	1				0.23	0.506
110	99999-99999	BLANK	0				0	0
120	K1310-25020	PULLEY	1				1.61	3.542
130	01053-50818	BOLT	4				0.011	0.0242
140	75599-33012	WASHER SPRING	4				0.002	0.0044
150	66101-82500	KIT PTO FRONT	1			OPTION NOT SALE	0.45	0.99
160	66101-82510	SHAFT PTO	1			OPTION	0.26	0.572
170	05012-00820	PIN STRAIGHT	1			OPTION	0.008	0.0176
180	01123-50828	BOLT	4			OPTION	0.014	0.0308
190	66101-82520	MANUAL ASSEMBLY	1			OPTION	0.01	0.022

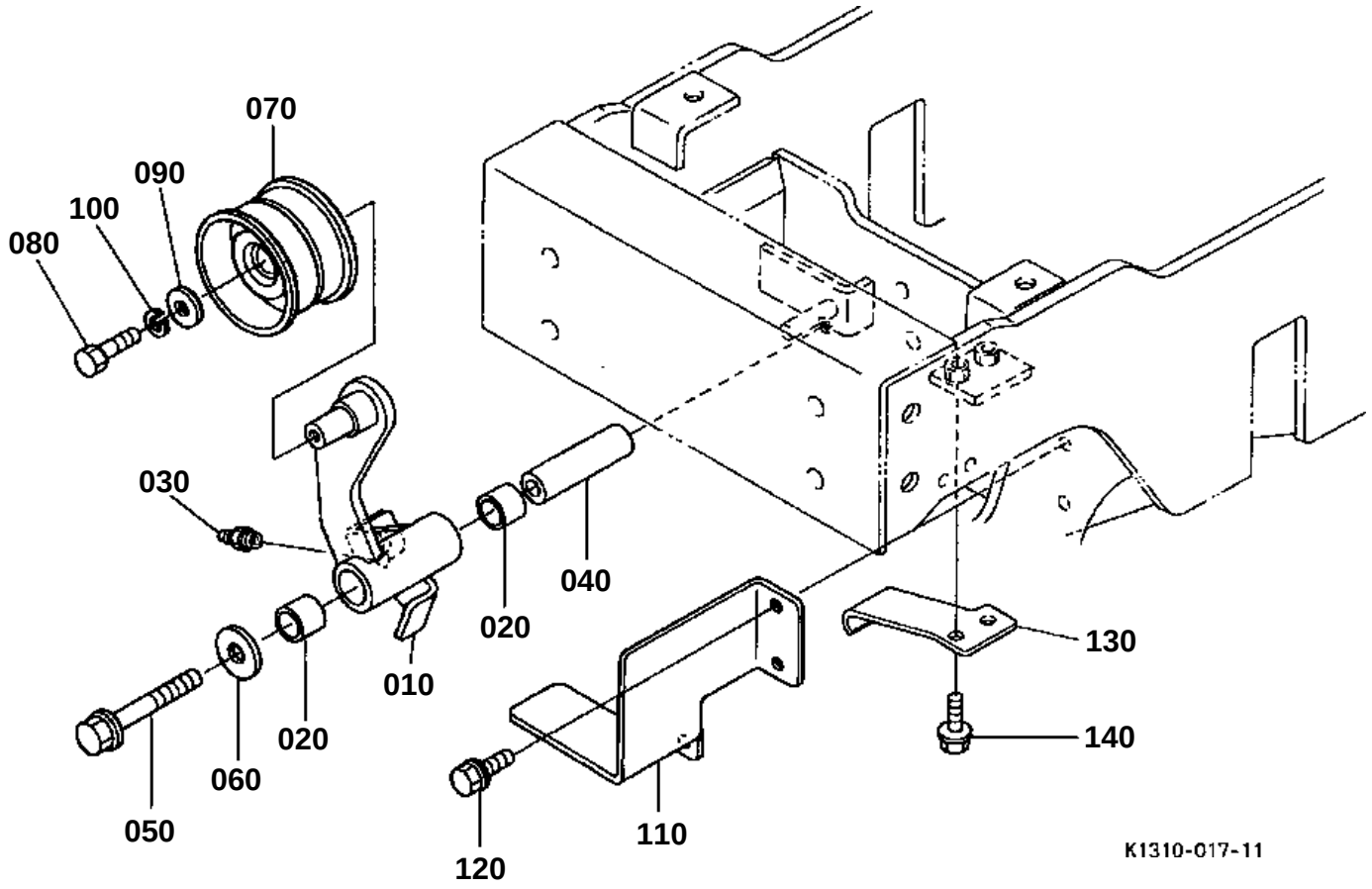
070
090
100
080
030
040
020
010
020
060
050
120
110
130
140
K1310-017-11

PTO TENSION PULLEY

↔ Interchangeable; ≠ not interchangeable; ← new for old; → old for new

REF.No	Part No.	Description	Q'ty	S.No.	I/C	REMARKS	Weight (kgf)	Weight (lb)
010	K1310-25060	ARM TENSION	1				0.63	1.386
020	K5651-20150	BUSHING TENSION	2				0.017	0.0374
030	K1122-15150	NIPPLE GREASE	1				0.002	0.0044
040	K1310-25070	COLLAR TENSION	1				0.111	0.2442
050	01754-51090	BOLT FLANGE	1				0.05	0.11
060	K1122-41260	WASHER PLAIN	1				0.02	0.044
070	K1122-26310	PULLY TENSION PTO	1				0.37	0.814
080	01053-50818	BOLT	1				0.011	0.0242
090	K5112-72830	WASHER PLAIN	1				0.005	0.011
100	75599-33012	WASHER SPRING	1				0.002	0.0044
110	K1310-25110	STAY BELT	1				0.4	0.88
120	01754-50816	BOLT FLANGE	2				0.011	0.0242
130	K1310-25220	RETAINER BELT	1				0.062	0.1364
140	01754-50816	BOLT FLANGE	2				0.011	0.0242

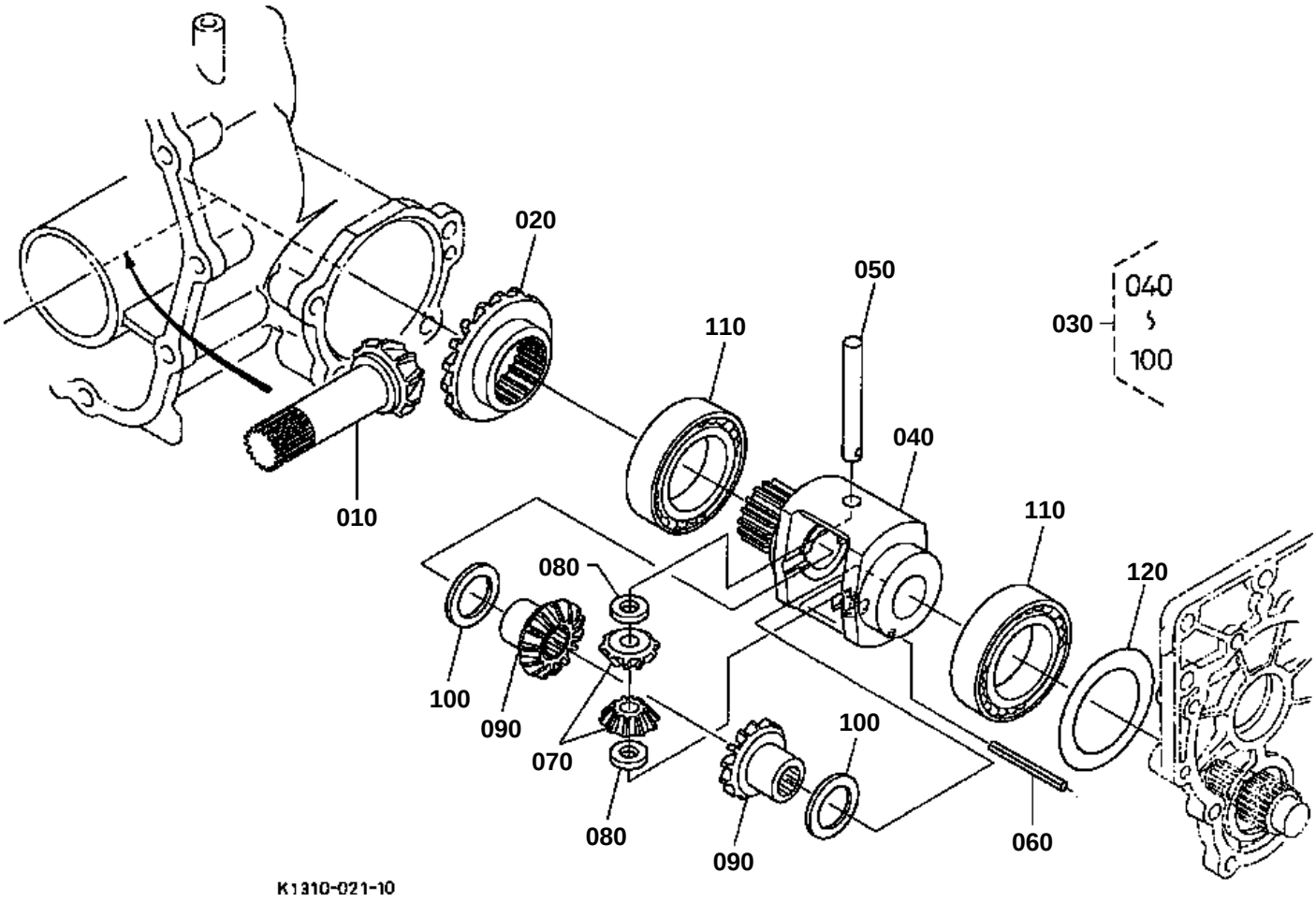
020
050
040
100
030
110
040
010
110
080
120
100
090
070
100
080
090
060
K1310-021-10

↔ Interchangeable; ≠ not interchangeable; ← new for old; → old for new

REF.No	Part No.	Description	Q'ty	S.No.	I/C	REMARKS	Weight (kgf)	Weight (lb)
010	K1310-14310	SHAFT B.GEAR	1			11T	0.055	0.121
020	K2561-15910	GEAR BEVEL	1			20T	0.37	0.814
030	K2561-16010	ASSY DIFF. FRONT	1				1.29	2.838
040	K2561-16020	CASE DIFF.FRONT	1				0.94	2.068
050	K2561-16120	SHAFT DIFF.PINION	1				0.045	0.099
060	05411-00440	PIN SPRING	1				0.002	0.0044
070	K2561-16130	GEAR BEVEL	2			10T	0.05	0.11
080	K2561-16050	SHIM	2			3.5mm	0.006	0.0132
080	K2561-16060	SHIM	2			3.3mm	0.005	0.011
080	K2561-16070	SHIM	2			3.7mm	0.006	0.0132
080	K2561-16080	SHIM	2			3.9mm	0.006	0.0132
090	K2561-16140	GEAR BEVEL	2			14T	0.11	0.242
100	37410-56930	SHIM	2			1.0mm	0.005	0.011
100	37410-56920	SHIM	2			0.8mm	0.005	0.011
100	37410-56940	SHIM	2			1.2mm	0.01	0.022
110	08101-06010	BEARING BALL	2				0.262	0.5764
120	31353-43770	SHIM	1				0.015	0.033
120	31353-43780	SHIM	1			1.0mm	0.014	0.0308
120	31353-43790	SHIM	1			1.2mm	0.015	0.033

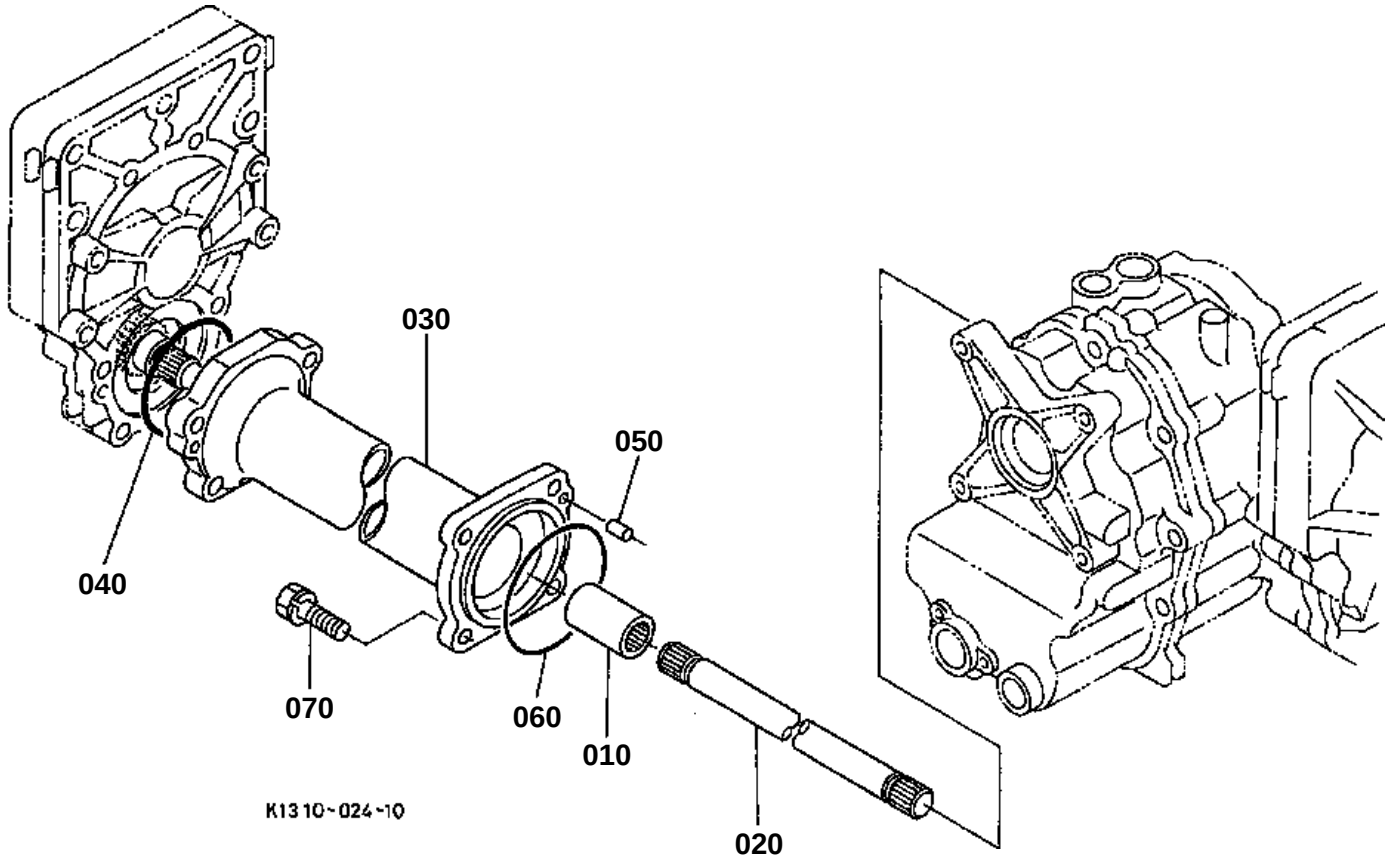
030
050
040
070
060
010
020
K1310-024-10

REAR DIFFERENTIAL SHAFT

↔ Interchangeable; ≠ not interchangeable; ← new for old; → old for new

REF.No	Part No.	Description	Q'ty	S.No.	I/C	REMARKS	Weight (kgf)	Weight (lb)
010	K1310-14390	BOSS SPLINE	1				0.13	0.286
020	K1310-14480	SHAFT DIFF.	1				0.75	1.65
030	K1310-14490	SUPPORT(R.AXLE)	1				2.9	6.38
040	04811-10750	O RING	1				0.001	0.0022
050	05012-00814	PIN STRAIGHT	1				0.006	0.0132
060	04811-10850	O RING	1				0.002	0.0044
070	01123-51035	BOLT	4				0.025	0.055

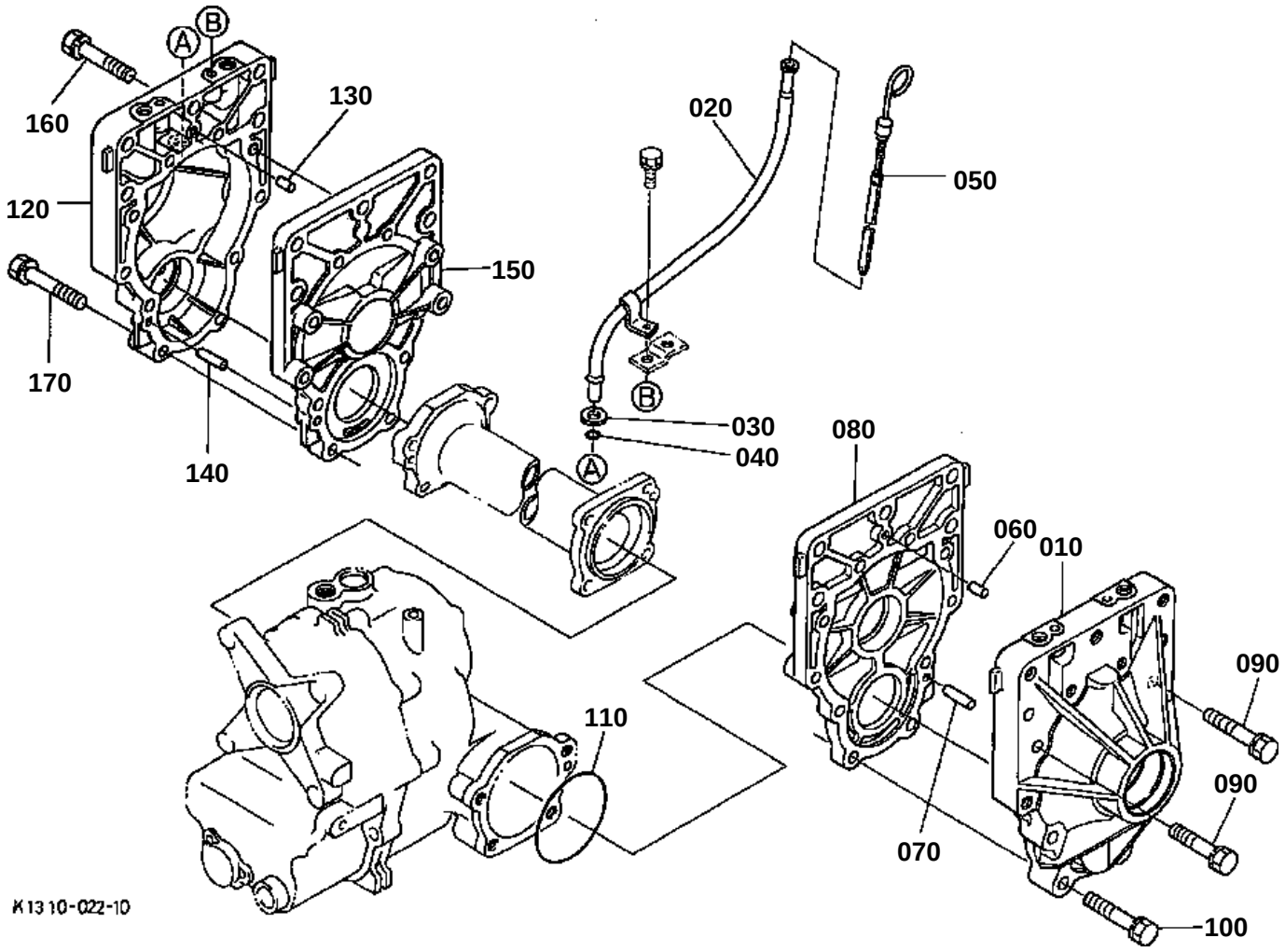
160
130
120
150
170
140
020
050
030
040
080
060
010
090
110
090
070
100
K1310-022-10

↔ Interchangeable; ≠ not interchangeable; ← new for old; → old for new

REF.No	Part No.	Description	Q'ty	S.No.	I/C	REMARKS	Weight (kgf)	Weight (lb)
010	K1310-14380	CASE LEFT(R.A)	1				1.52	3.344
020	K1310-14630	GUIDE GAUGE	1				0.1	0.22
030	04011-50100	WASHER PLAIN	1				0.002	0.0044
040	04811-00100	O RING	1				0	0
040	04816-00100	O RING	1		←		0.01	0.022
050	K1310-14614	GAUGE OIL	1				0.02	0.044
060	05012-00814	PIN STRAIGHT	1				0.006	0.0132
070	05012-00828	PIN STRAIGHT	1				0.012	0.0264
080	K1310-14420	COVER(R.AXLE)	1				0.81	1.782
090	01123-51055	BOLT	4				0.038	0.0836
100	01123-51065	BOLT	4				0.04	0.088
110	04811-10800	O RING	1				0.001	0.0022
120	K1310-14410	CASE RIGHT(R.A)	1				1.48	3.256
130	05012-00814	PIN STRAIGHT	1				0.006	0.0132
140	05012-00828	PIN STRAIGHT	1				0.012	0.0264
150	K1310-14420	COVER(R.AXLE)	1				0.81	1.782
160	01123-51055	BOLT	4				0.038	0.0836
170	01123-51060	BOLT	4				0.05	0.11

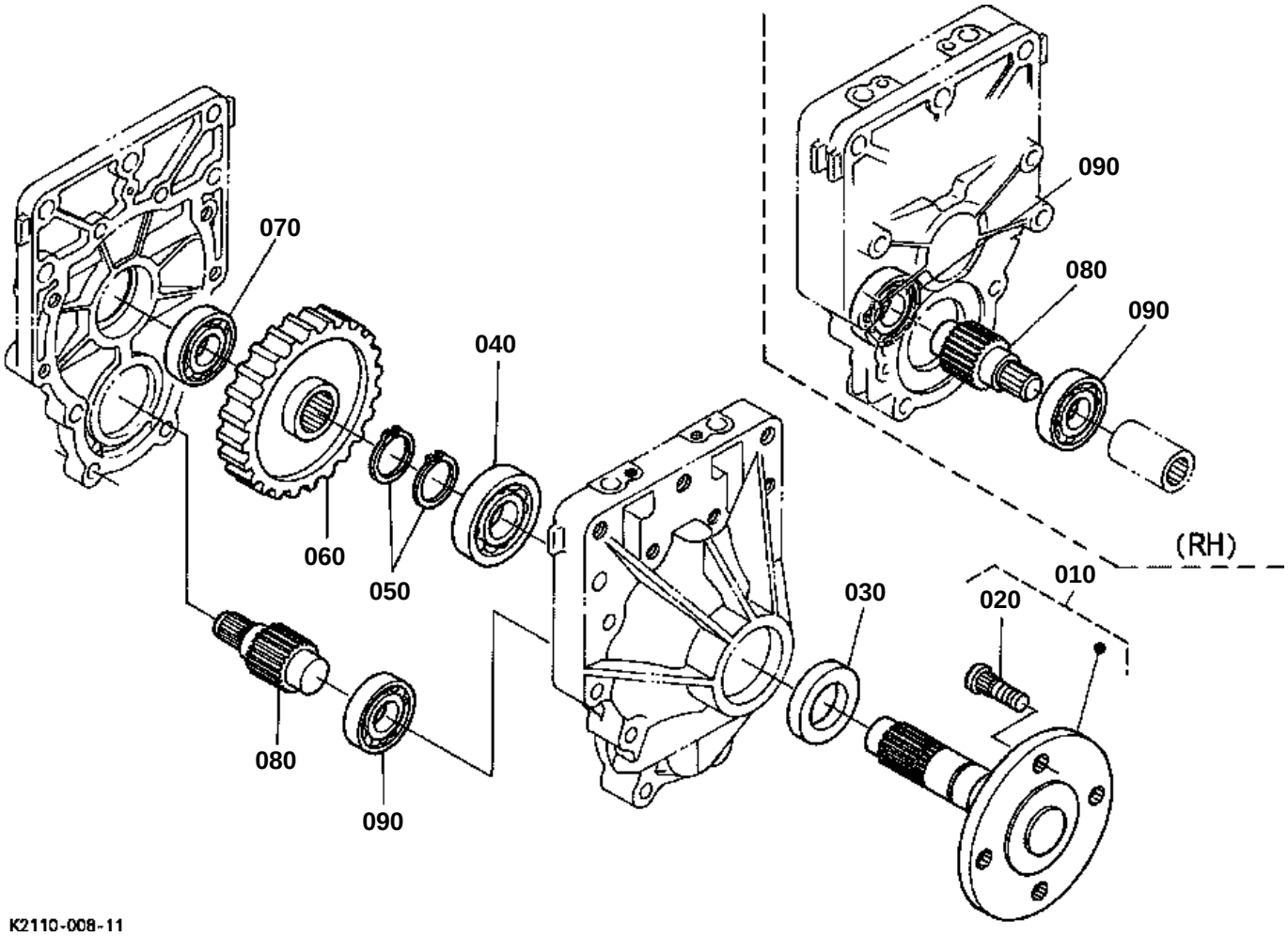
070
040
060
050
080
090
090
080
030
020
010
(RH)
K2110-008-11

↔ Interchangeable; ≠ not interchangeable; ← new for old; → old for new

REF.No	Part No.	Description	Q'ty	S.No.	I/C	REMARKS	Weight (kgf)	Weight (lb)
010	K1310-14010	ASSY AXLE REAR	2				2.05	4.51
020	6C040-57330	BOLT	8				0.035	0.077
030	09500-35558	SEAL OIL	2				0.02	0.044
040	08101-06206	BEARING BALL	2				0.196	0.4312
050	36330-80660	CIR CLIP EXTERNAL	4				0.02	0.044
060	K1310-14450	GEAR	2			49T	1.36	2.992
070	08101-06205	BEARING BALL	2				0.14	0.308
080	K1310-14470	GEAR SHAFT	2			12T	0.29	0.638
090	08101-06205	BEARING BALL	3				0.14	0.308

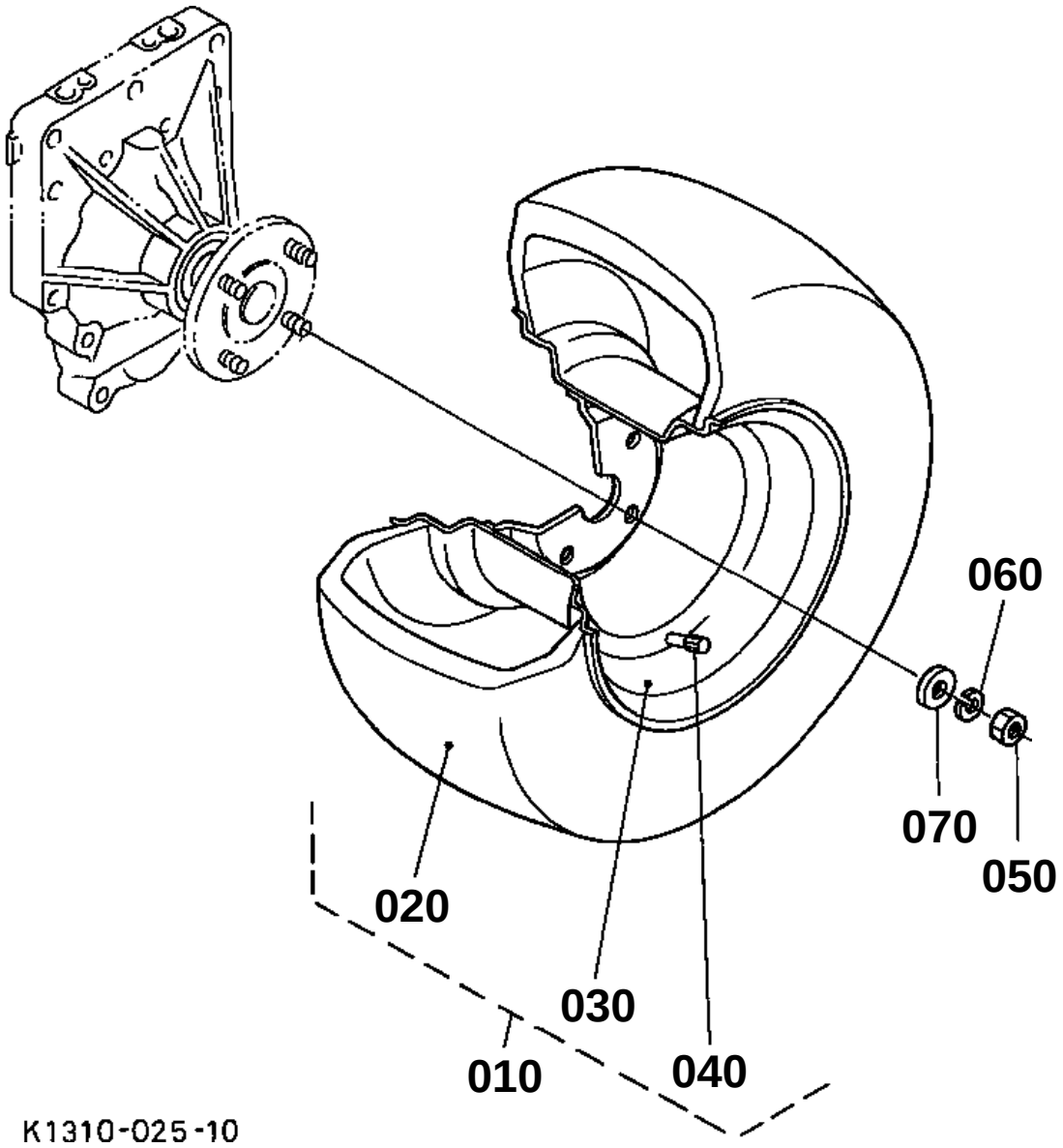
060
070
050
020
030
010
040
K1310-025-10

↔ Interchangeable; ≠ not interchangeable; ← new for old; → old for new

REF.No	Part No.	Description	Q'ty	S.No.	I/C	REMARKS	Weight (kgf)	Weight (lb)
010	K1211-11710	ASSY TIRE REAR	2				15.3	33.66
020	K3511-99110	TIRE	2				6.5	14.3
030	K1211-11910	WHEEL	2				7.95	17.49
040	66120-17190	VALVE TIRE	2				0.012	0.0264
050	K1310-11640	NUT	8				0.001	0.0022
060	04512-60120	WASHER SPRING	8				0.005	0.011
070	04013-60120	WASHER PLAIN	8				0.01	0.022

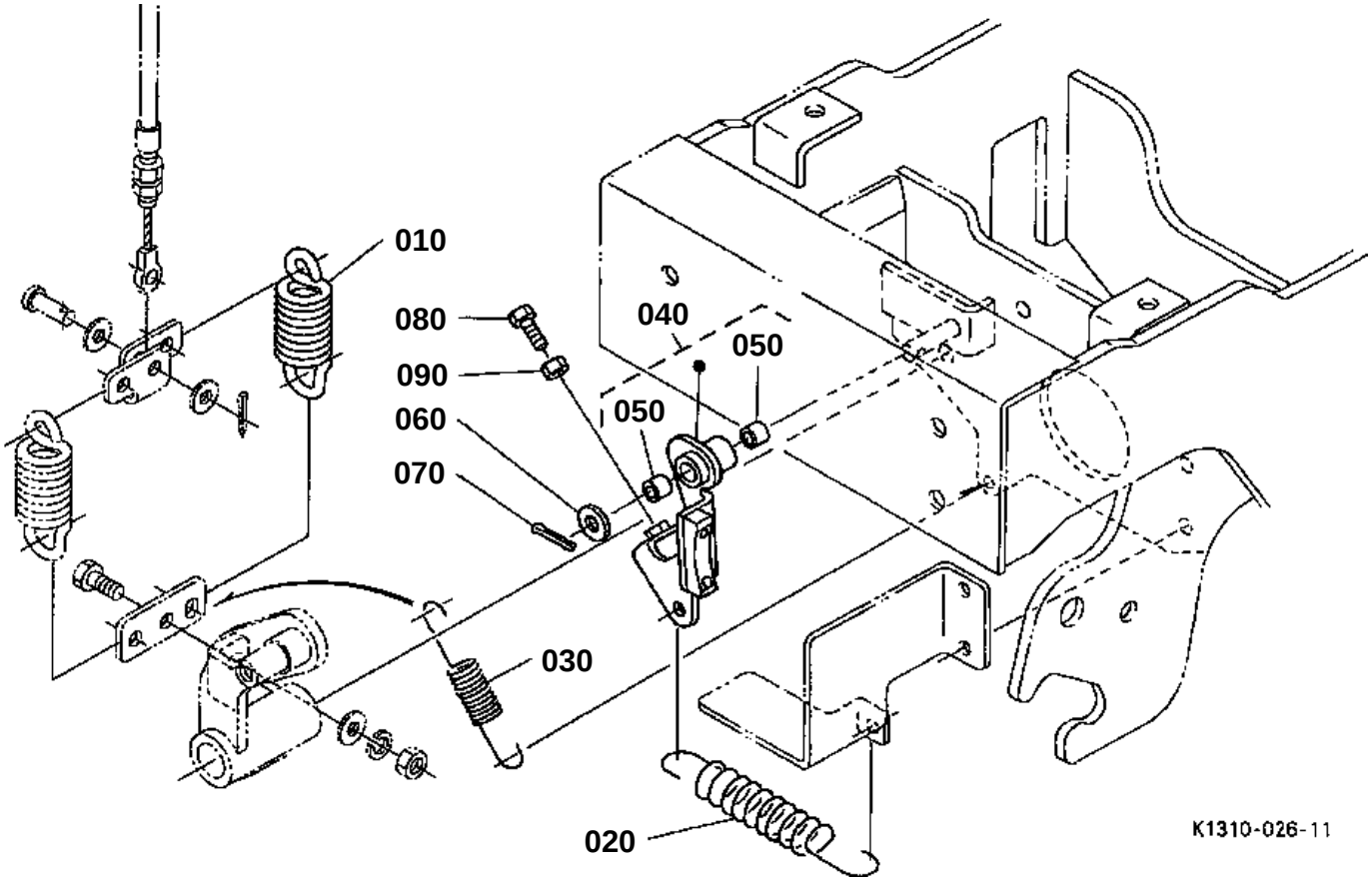
010
080
090
060
070
040
050
050
030
020
K1310-026-11

PTO BRAKE

↔ Interchangeable; ≠ not interchangeable; ← new for old; → old for new

REF.No	Part No.	Description	Q'ty	S.No.	I/C	REMARKS	Weight (kgf)	Weight (lb)
010	K1310-25312	SPRING	2				0.08	0.176
020	K1310-25320	SPRING PTO BRAKE	1				0.06	0.132
030	K1310-25340	SPRING RETURN	1				0.022	0.0484
040	K1310-25334	ASSY BRAKE PTO	1				0.18	0.396
050	K1310-25350	BUSHING DU	2				0.004	0.0088
060	75599-32013	WASHER PLAIN	1				0.03	0.066
070	75599-53152	PIN COTTER	1				0.001	0.0022
080	01155-50840	BOLT	1				0.02	0.044
090	02052-50080	NUT	1				0.004	0.0088

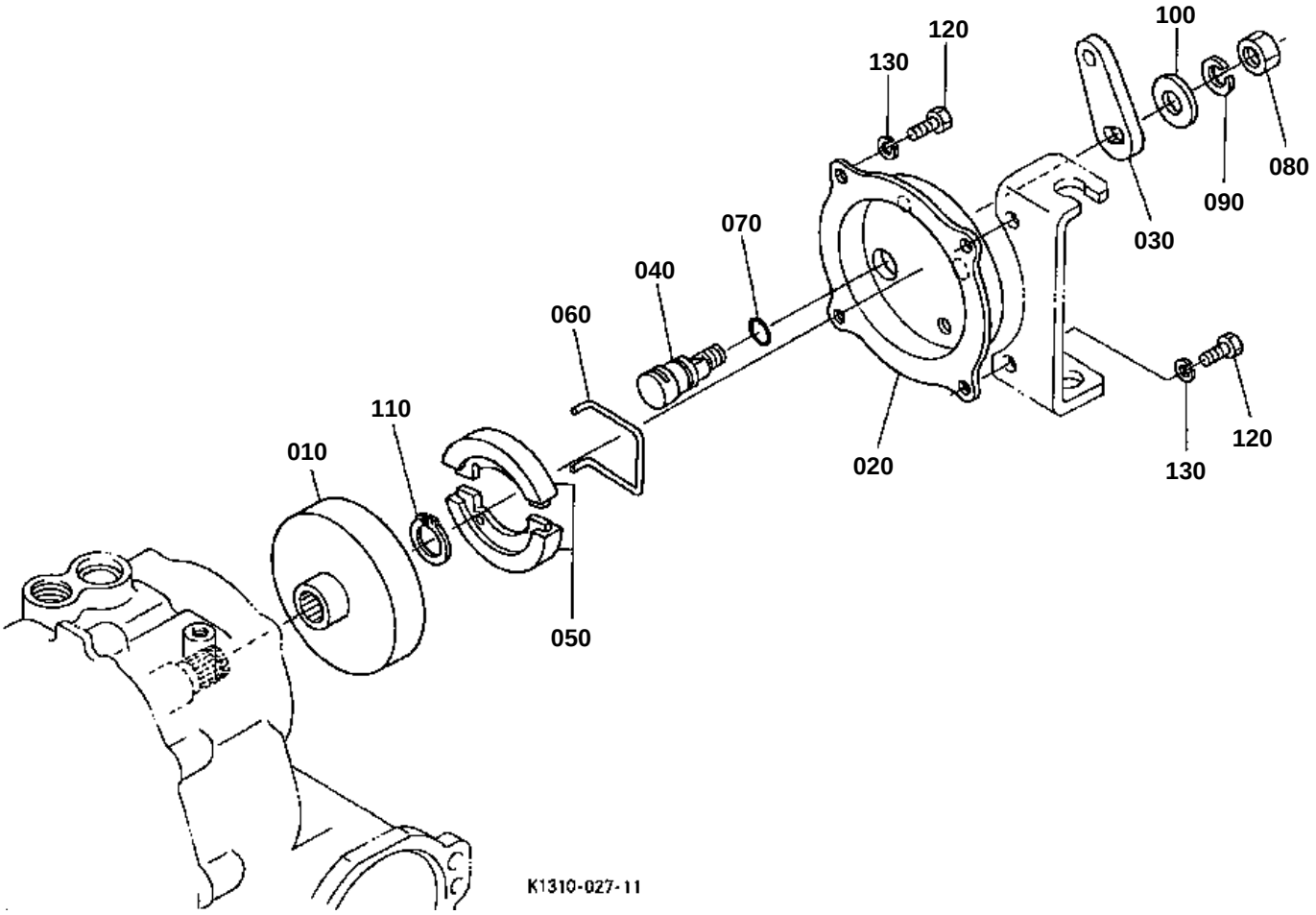
100
120
130
080
090
030
070
040
060
110
010
020
120
130
050
K1310-027-11

↔ Interchangeable; ≠ not interchangeable; ← new for old; → old for new

REF.No	Part No.	Description	Q'ty	S.No.	I/C	REMARKS	Weight (kgf)	Weight (lb)
010	66101-22310	DRUM BRAKE	1				0.18	0.396
020	66021-22320	COVER BRAKE	1				0.24	0.528
030	66021-22330	LEVER BRAKE	1				0.048	0.1056
040	66021-22340	SHAFT BRAKE CAM	1				0.048	0.1056
050	66071-22390	KIT SHOE BRAKE	1			SET	0.03	0.066
060	66021-22360	SPRING SHOE RETURN	1				0.005	0.011
070	63611-22140	O RING	1				0.001	0.0022
080	02014-50100	NUT	1				0.011	0.0242
090	04512-50100	WASHER SPRING	1				0	0
100	66021-22410	WASHER	1				0.003	0.0066
110	04612-00180	CIR CLIP EXTERNAL	1				0.001	0.0022
120	01053-50616	BOLT	4				0.005	0.011
130	75599-33010	WASHER SPRING	4				0.001	0.0022

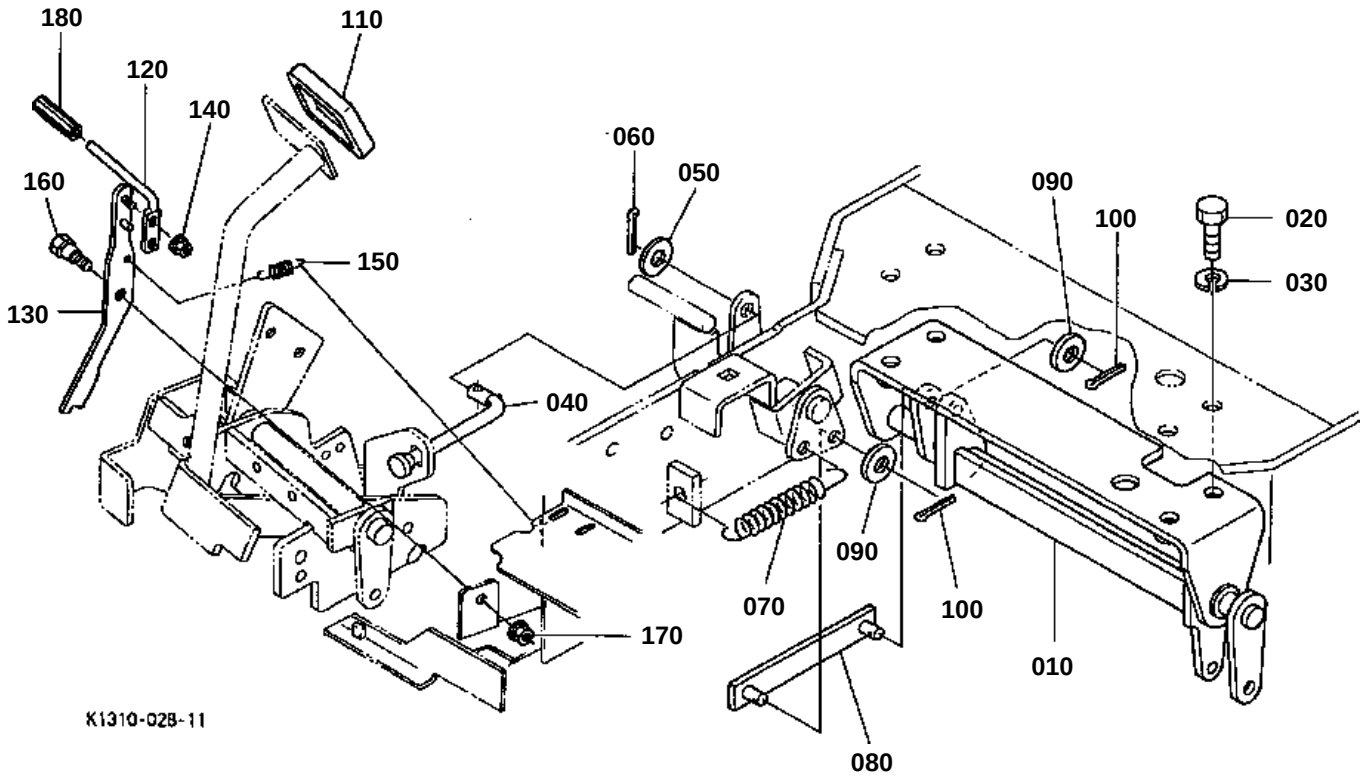
180
110
120
140
060
050
090
100
020
160
150
030
130
040
090
070
100
170
010
K1310-028-11
080

BRAKE PEDAL

↔ Interchangeable; ≠ not interchangeable; ← new for old; → old for new

REF.No	Part No.	Description	Q'ty	S.No.	I/C	REMARKS	Weight (kgf)	Weight (lb)
010	K1310-21030	LEVER BRAKE COMP	1				2.11	4.642
020	01053-51025	BOLT	4				0.025	0.055
030	04512-60100	WASHER SPRING	4				0.002	0.0044
040	K1310-43110	ROD BRAKE	1				0.054	0.1188
050	75599-32012	WASHER PLAIN	1				0.002	0.0044
060	75599-53152	PIN COTTER	1				0.001	0.0022
070	K1310-43460	SPRING RETURN	1				0.05	0.11
080	K1310-43130	PLATE BRAKE	1				0.113	0.2486
090	75599-32012	WASHER PLAIN	2				0.002	0.0044
100	75599-53152	PIN COTTER	2				0.001	0.0022
110	K1122-43150	COVER BRAKE PEDAL	1				0.022	0.0484
120	K1211-43210	PEDAL PARKING LOCK	1				0.14	0.308
130	K1211-43220	LOCK BRAKE	1				0.31	0.682
140	02751-50080	NUT FLANGE	1				0.006	0.0132
150	K1122-43230	SPRING PARKING LOCK	1				0.02	0.044
160	K1122-43280	BOLT SHOULDER	1				0.044	0.0968
170	K1122-91960	NUT FLANGE	1				0.012	0.0264
180	K1122-43250	COVER PARKING BRAKE	1				0.007	0.0154

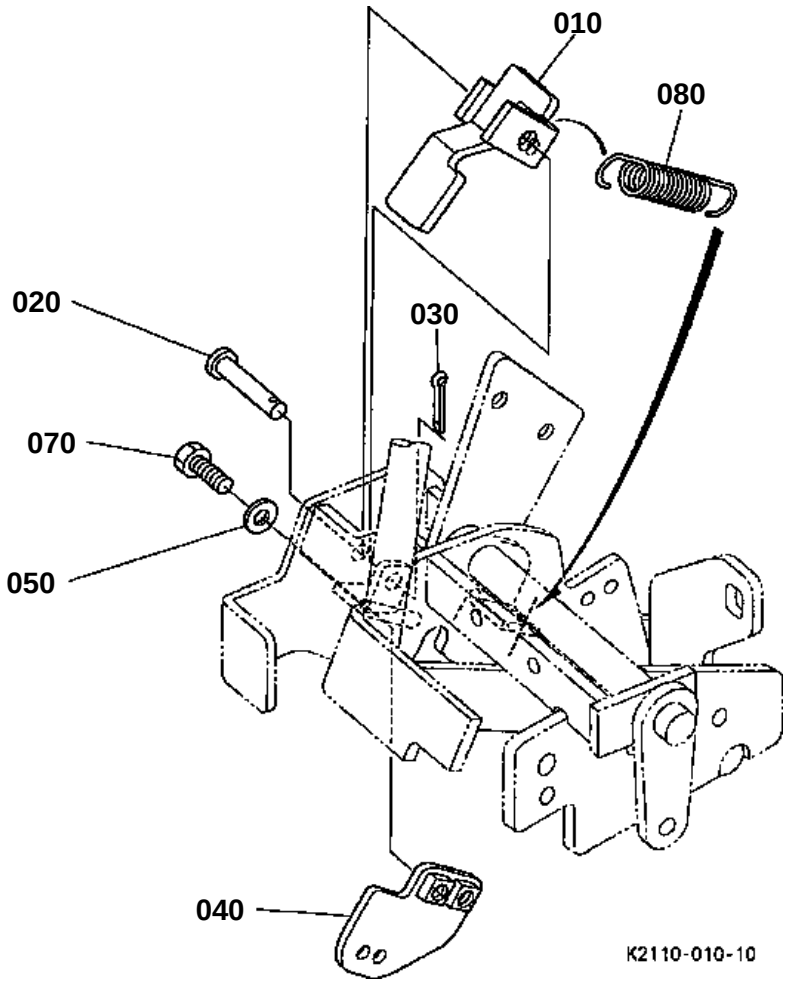
010
080
020
030
070
050
040
K2110-010-10

PARKING BRAKE LEVER

↔ Interchangeable; ≠ not interchangeable; ← new for old; → old for new

REF.No	Part No.	Description	Q'ty	S.No.	I/C	REMARKS	Weight (kgf)	Weight (lb)
010	K2110-43510	LEVER SW-R	1				0.08	0.176
020	75599-51227	PIN CLEVIS	1				0.014	0.0308
030	75599-53171	PIN SPLIT	1				0.001	0.0022
040	K2110-43520	PLATE SW-R	1				0.055	0.121
050	75599-32111	WASHER PLAIN	2				0.002	0.0044
060	99999-99999	BLANK	0				0	0
070	01754-50620	BOLT FLANGE	2				0.007	0.0154
080	K1122-43230	SPRING PARKING LOCK	1				0.02	0.044

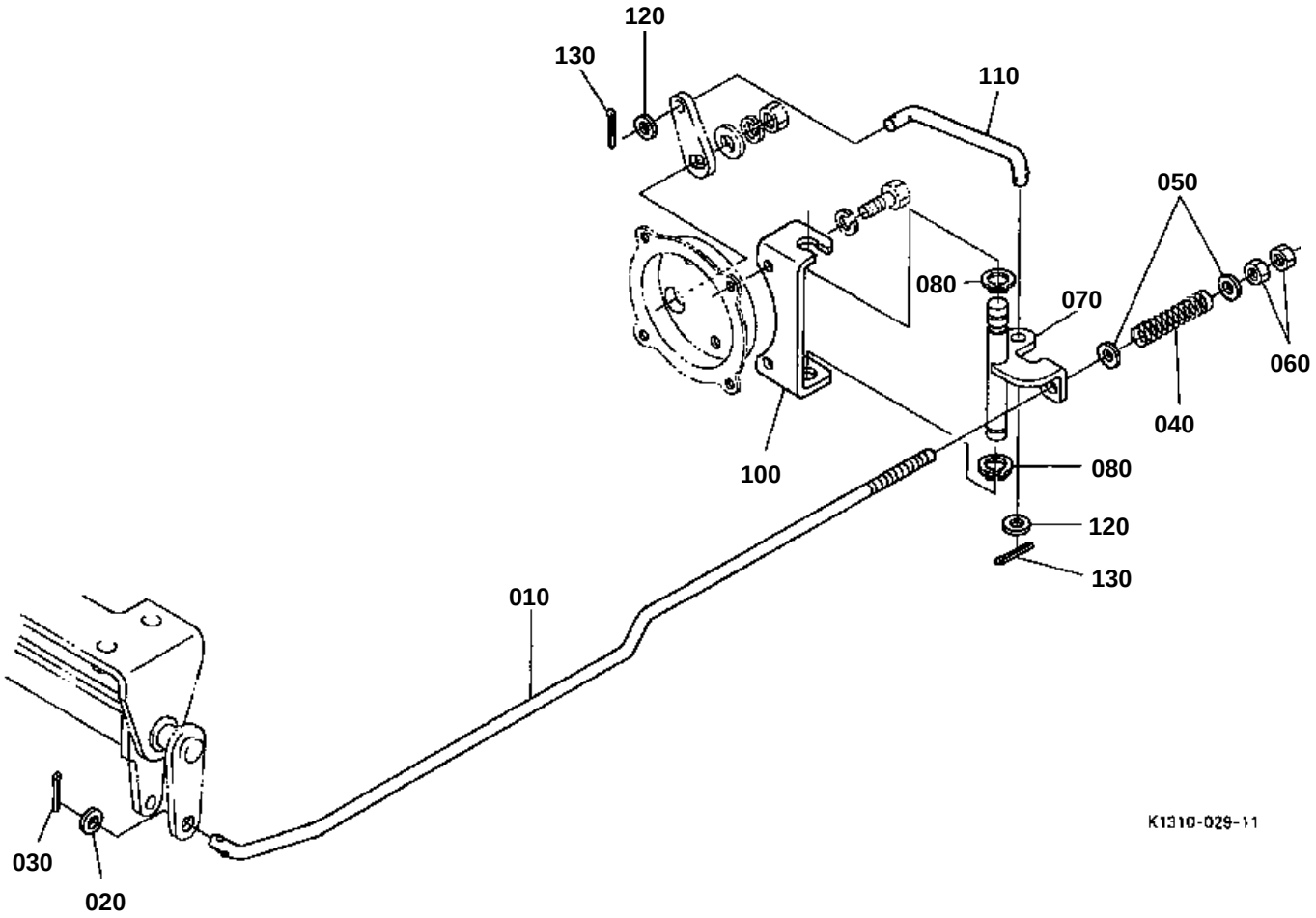
120
130
110
050
080
070
060
040
100
080
120
130
010
030
020
K1310-029-11

BRAKE ROD

↔ Interchangeable; ≠ not interchangeable; ← new for old; → old for new

REF.No	Part No.	Description	Q'ty	S.No.	I/C	REMARKS	Weight (kgf)	Weight (lb)
010	K1310-43150	ROD BRAKE	1				0.27	0.594
020	75599-32012	WASHER PLAIN	1				0.002	0.0044
030	75599-53152	PIN COTTER	1				0.001	0.0022
040	K1211-43120	SPRING BRAKE	1				0.05	0.11
050	75599-32012	WASHER PLAIN	2				0.002	0.0044
060	02054-50080	NUT	2				0.005	0.011
070	K1310-43420	FULCRUM SHAFT BRAKE	1				0.235	0.517
080	04612-00140	CIR CLIP EXTERNAL	2				0.001	0.0022
090	99999-99999	BLANK	0				0	0
100	K1310-43410	SUPPORT FULCRUM	1				0.175	0.385
110	K1310-43480	ROD BRAKE	1				0.05	0.11
120	75599-32012	WASHER PLAIN	2				0.002	0.0044
130	75599-53152	PIN COTTER	2				0.001	0.0022

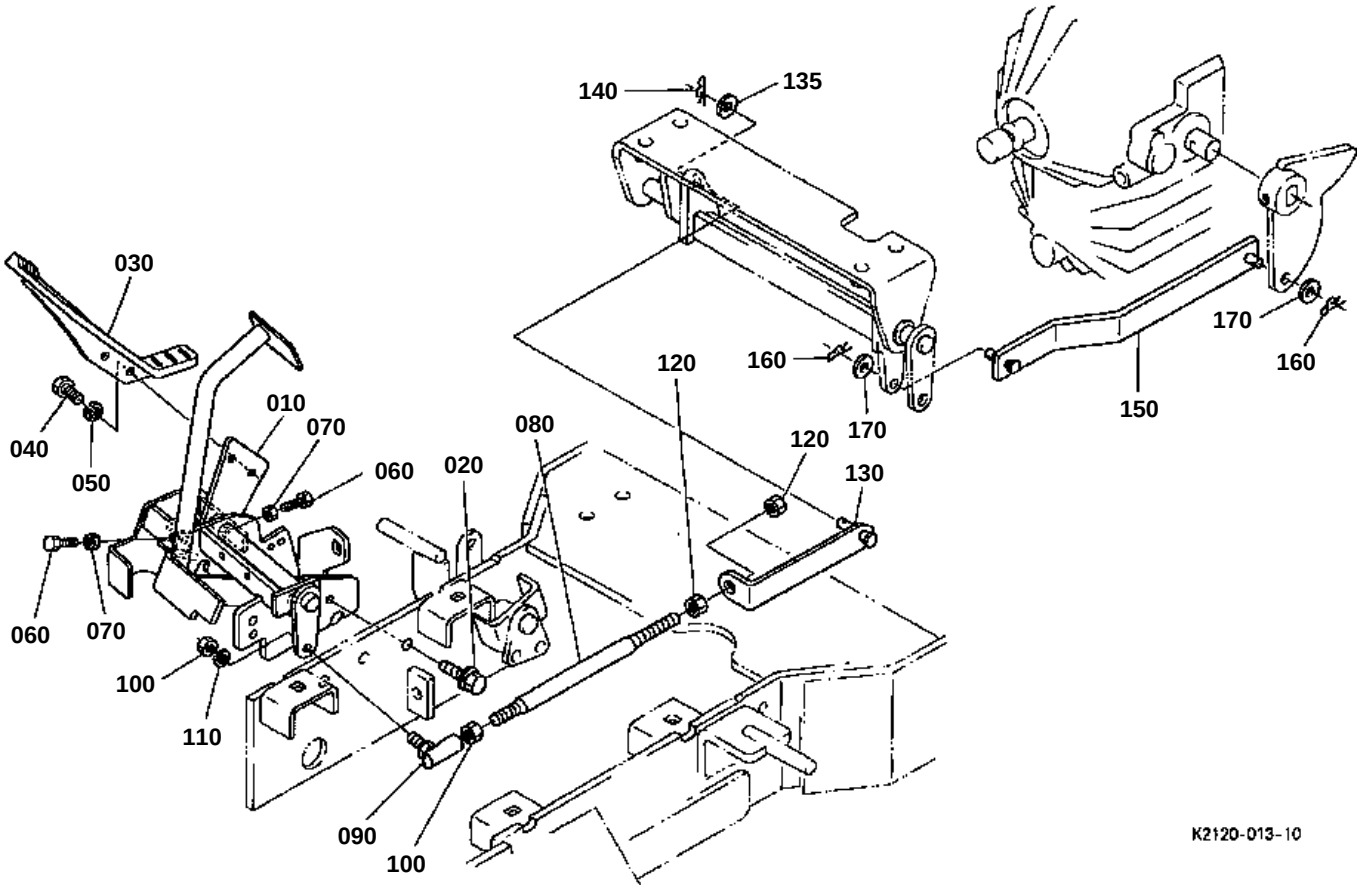
140
135
030
040
050
010
070
060
020
080
120
160
170
150
130
060
070
100
110
090
100
K2120-013-10

SPEED CHANGE PEDAL

↔ Interchangeable; ≠ not interchangeable; ← new for old; → old for new

REF.No	Part No.	Description	Q'ty	S.No.	I/C	REMARKS	Weight (kgf)	Weight (lb)
010	K2110-43010	PEDAL SYSTEM COMP	1				3.695	8.129
020	01754-50820	BOLT FLANGE	3				0.015	0.033
030	K1122-42010	PEDAL SPEED CHANGE	1				0.54	1.188
040	01053-50818	BOLT	2				0.011	0.0242
050	75599-33012	WASHER SPRING	2				0.002	0.0044
060	01155-50840	BOLT	2				0.02	0.044
070	02054-50080	NUT	2				0.005	0.011
080	K1310-42020	ROD SPEED CHANGE	1				0.13	0.286
090	K1122-42080	ROD END	1				0.03	0.066
100	75599-31022	NUT	2				0.015	0.033
110	75599-33012	WASHER SPRING	1				0.002	0.0044
120	02018-50100	NUT	2				0.011	0.0242
130	K1310-42120	PLATE SPEED CHANGE	1				0.19	0.418
135	75599-32012	WASHER PLAIN	1				0.002	0.0044
140	K1211-91120	RUE RING COTTER	1				0.001	0.0022
150	K1310-42050	PLATE SPEED CHANGE	1				0.36	0.792
160	K1211-91120	RUE RING COTTER	2				0.001	0.0022
170	75599-32012	WASHER PLAIN	2				0.002	0.0044

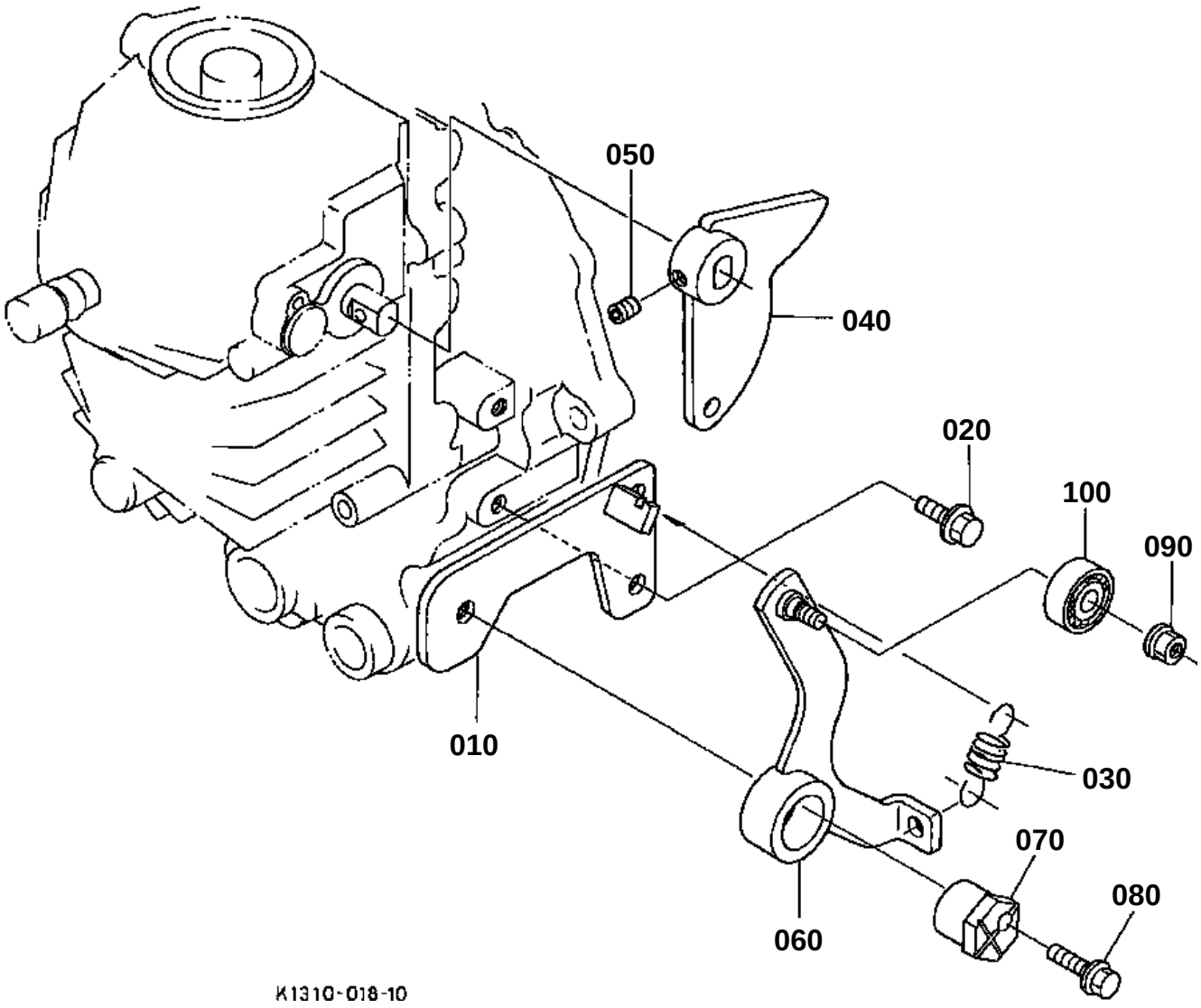
050
040
020
100
090
010
030
070
080
060
K1310-018-10

SPEED CONTROL ARM

↔ Interchangeable; ≠ not interchangeable; ← new for old; → old for new

REF.No	Part No.	Description	Q'ty	S.No.	I/C	REMARKS	Weight (kgf)	Weight (lb)
010	K1310-36140	HOLDER N.ARM	1				0.24	0.528
020	01754-50820	BOLT FLANGE	2				0.015	0.033
030	K1310-36180	SPRING NEUTRAL	1				0.05	0.11
040	K1310-36150	ARM SPEED CONTROL	1				0.28	0.616
050	K1122-91980	SCREW SET	1				0.004	0.0088
060	K1310-36160	ARM NEUTRAL	1				0.26	0.572
070	K1122-42070	SHAFT HOLDER	1				0.14	0.308
080	01754-50840	BOLT FLANGE	1				0.02	0.044
090	02751-50080	NUT FLANGE	1				0.006	0.0132
100	08141-06000	BEARING BALL	1				0.017	0.0374

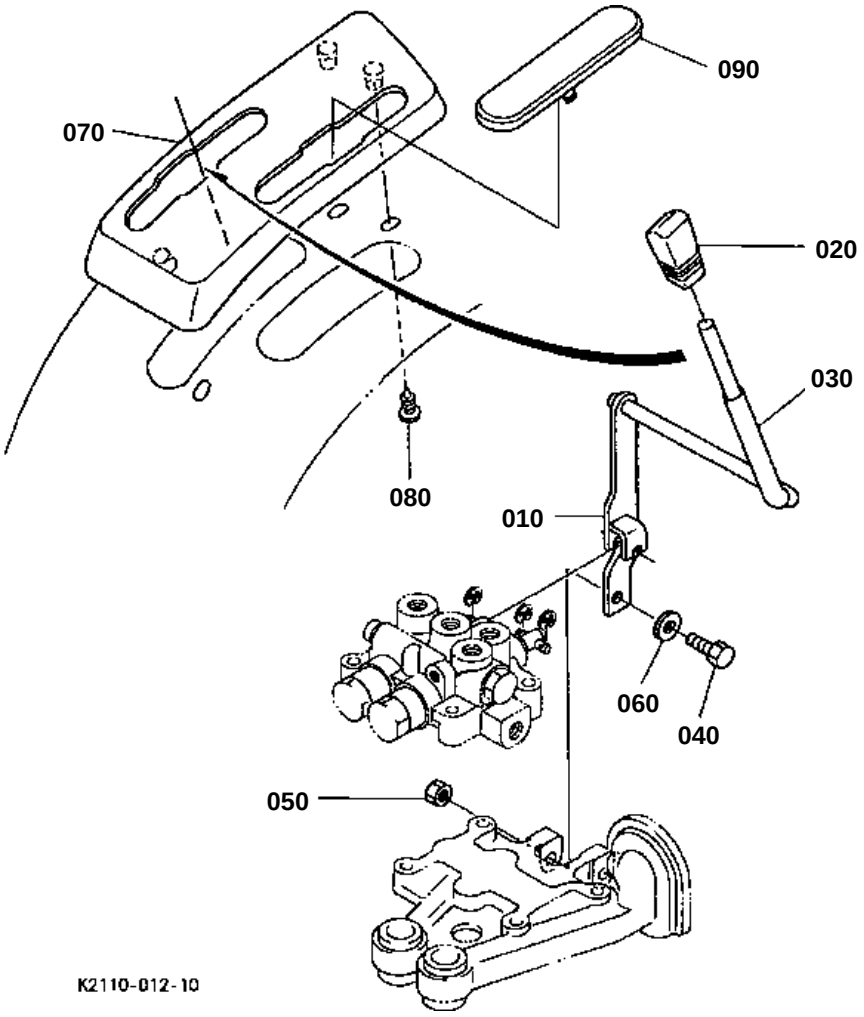
090
070
020
030
080
010
060
040
050
K2110-012-10

HYDRAULIC CONTROL LEVER

↔ Interchangeable; ≠ not interchangeable; ← new for old; → old for new

REF.No	Part No.	Description	Q'ty	S.No.	I/C	REMARKS	Weight (kgf)	Weight (lb)
010	K1310-36320	LEVER CONTROL	1				0.43	0.946
020	K1310-36350	GRIP LEVER	1				0.026	0.0572
030	K1310-36340	TUBE LEVER	1				0.01	0.022
040	01053-50830	BOLT	1				0.015	0.033
050	K5112-72840	NUT LOCK	1				0.005	0.011
060	75599-32012	WASHER PLAIN	1				0.002	0.0044
070	K1310-55230	COVER HYDRO LEVER	1				0.1	0.22
080	K1122-55280	SCREW TAPPING	3				0.002	0.0044
090	K2110-55242	COVER LEVER	1				0.02	0.044

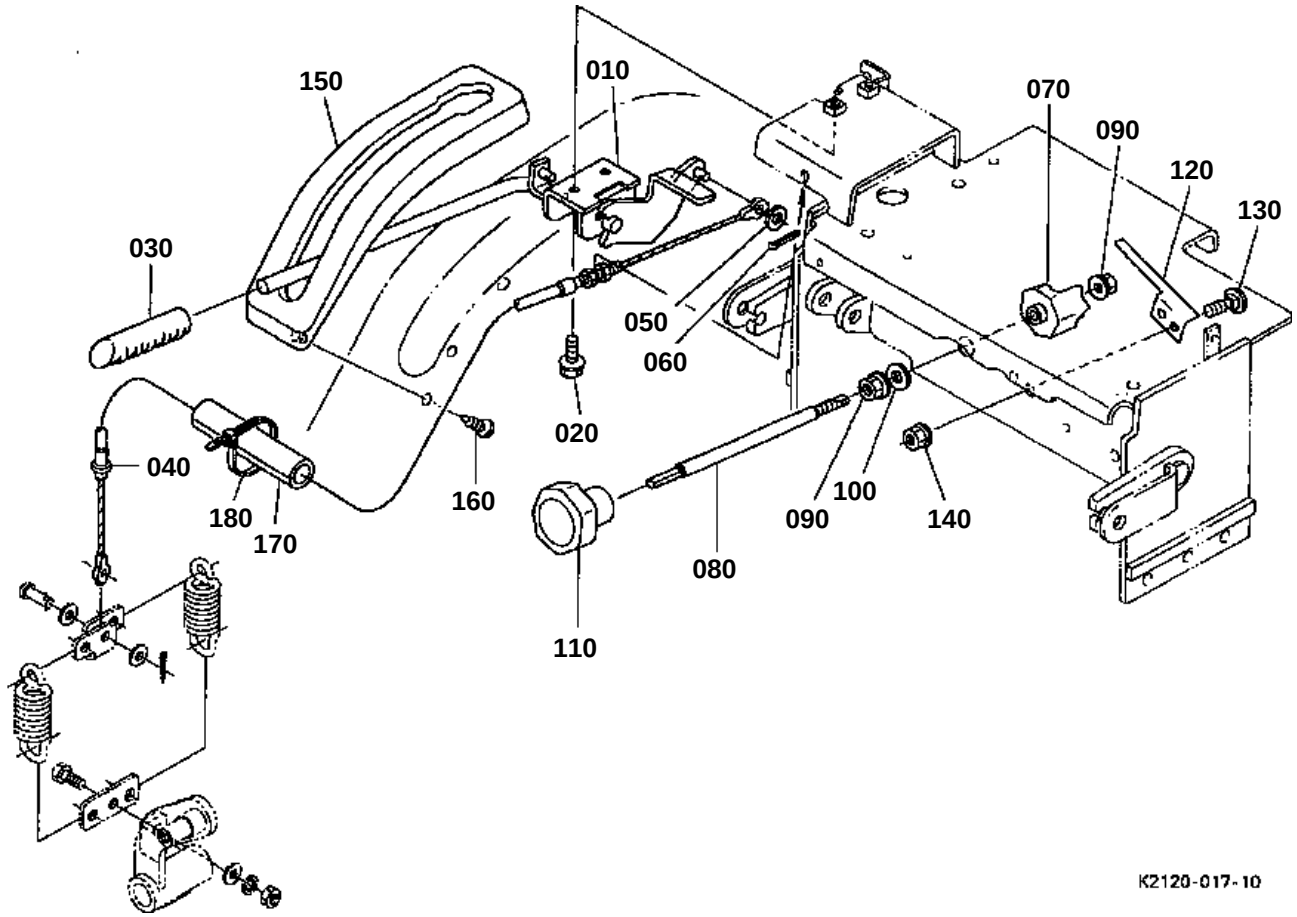
150
010
070
090
120
130
030
050
060
020
040
160
180
170
100
090
140
080
110
K2120-017-10

PTO CLUTCH CONTROL LEVER/WIRE

↔ Interchangeable; ≠ not interchangeable; ← new for old; → old for new

REF.No	Part No.	Description	Q'ty	S.No.	I/C	REMARKS	Weight (kgf)	Weight (lb)
010	K1310-25420	LEVER PTO COMP	1				0.39	0.858
020	01754-50820	BOLT FLANGE	2				0.015	0.033
030	K1122-46110	GRIP PTO	1				0.04	0.088
040	K1310-25430	WIRE PTO CLUTCH	1				0.4	0.88
050	75599-32012	WASHER PLAIN	1				0.002	0.0044
060	75599-53171	PIN COTTER	1				0.001	0.0022
070	K1211-44410	CAM	1				0.26	0.572
080	K1310-44420	ROD CAM	1				0.16	0.352
090	K1122-91960	NUT FLANGE	2				0.012	0.0264
100	75599-32113	WASHER PLAIN	1				0.01	0.022
110	K1132-44430	DIAL CAM	1				0.04	0.088
120	K1122-44440	SPRING RETAINER	1				0.04	0.088
130	K1122-91320	BOLT SHORT SQU.NECK	2				0.01	0.022
140	02751-50080	NUT FLANGE	2				0.006	0.0132
150	K1310-55220	COVER PTO LEVER	1				0.092	0.2024
160	K1122-55280	SCREW TAPPING	3				0.002	0.0044
170	K2120-13140	HOSE PTO WIRE	1				0.025	0.055
180	K1211-61250	CLAMP CORD	2				0.001	0.0022

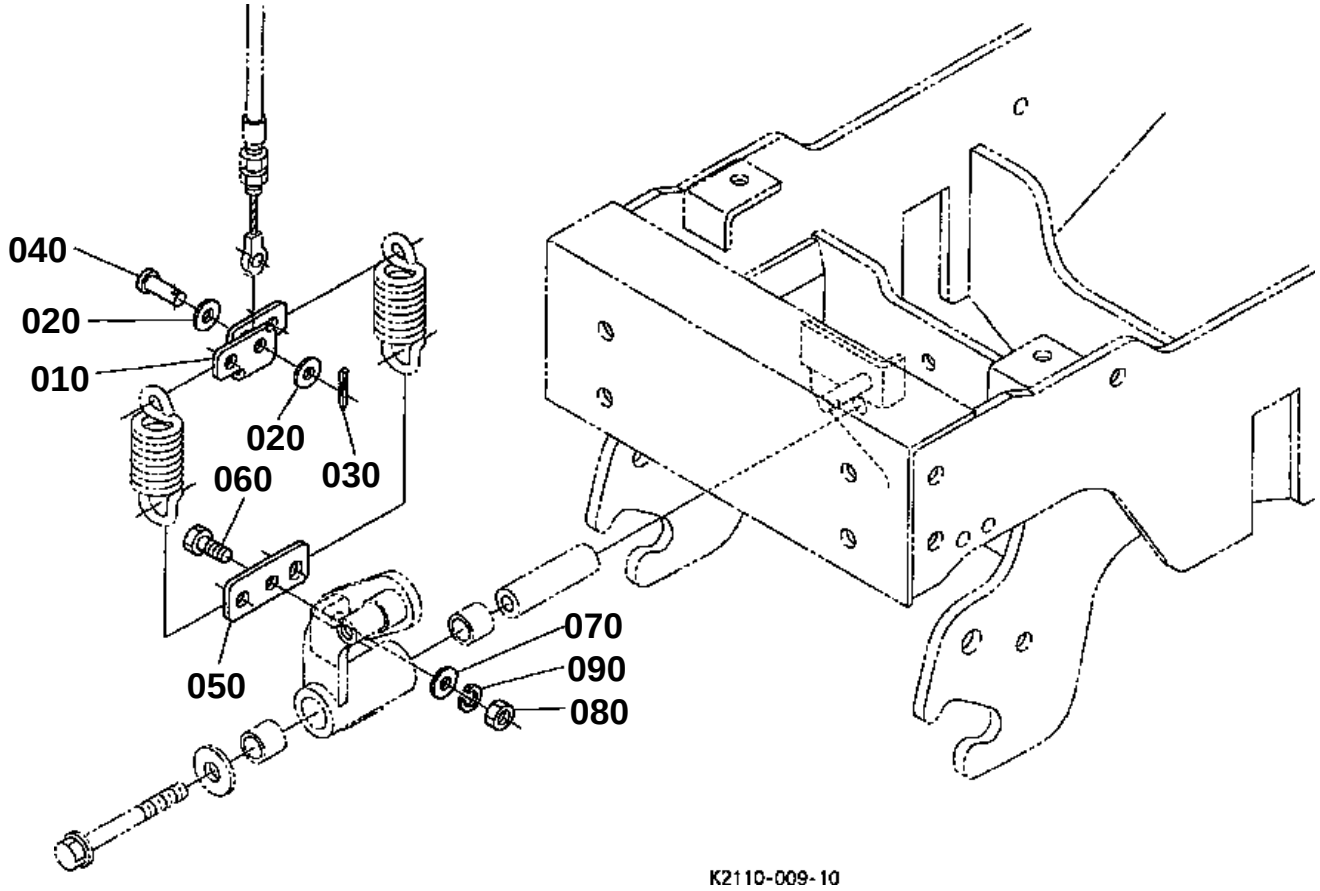
040
020
010
020
030
060
050
070
090
080
K2110-009-10

PTO WIRE BRACKET

↔ Interchangeable; ≠ not interchangeable; ← new for old; → old for new

REF.No	Part No.	Description	Q'ty	S.No.	I/C	REMARKS	Weight (kgf)	Weight (lb)
010	K1310-25440	BRACKET PTO WIRE	1				0.06	0.132
020	75599-32012	WASHER PLAIN	2				0.002	0.0044
030	05511-50220	PIN SPLIT	1				0.001	0.0022
040	05122-50825	PIN JOINT	1				0.011	0.0242
050	K1310-25450	BRACKET PTO SPRING	1				0.06	0.132
060	01053-50820	BOLT	1				0.012	0.0264
070	75599-32112	WASHER PLAIN	1				0.001	0.0022
080	02054-50080	NUT	1				0.005	0.011
090	75599-33012	WASHER SPRING	1				0.002	0.0044

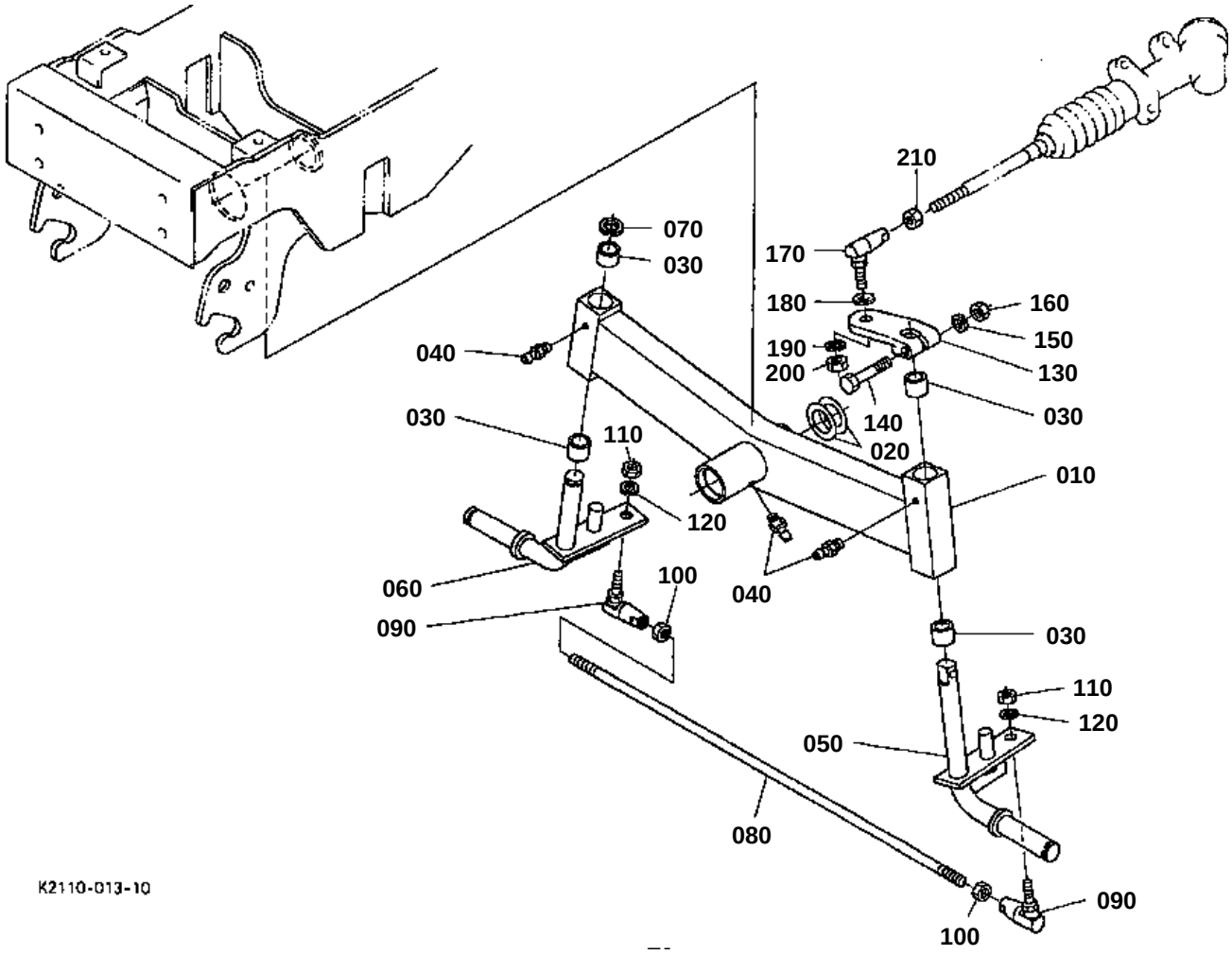
210
070
030
170
180
160
150
190
200
130
040
030
140
030
110
020
010
120
060
100
040
090
030
110
120
050
080
090
100
K2110-013-10

FRONT AXLE

↔ Interchangeable; ≠ not interchangeable; ← new for old; → old for new

REF.No	Part No.	Description	Q'ty	S.No.	I/C	REMARKS	Weight (kgf)	Weight (lb)
010	K2110-15110	COMP FRONT AXLE	1				6.5	14.3
020	K1310-15120	SHIM	1			1.5mm	0.011	0.0242
020	K1310-15130	SHIM	1			1.9mm	0.014	0.0308
020	K1310-15140	SHIM	1			2.3mm	0.02	0.044
020	K1310-15150	SHIM	1			3.0mm	0.023	0.0506
030	66021-56130	BEARING DRY	4				0.017	0.0374
040	K1122-15150	NIPPLE GREASE	3				0.002	0.0044
050	K1310-15160	KING PIN LH	1				1.75	3.85
060	K1310-15170	KING PIN RH	1				1.61	3.542
070	04612-00250	CIR CLIP EXTERNAL	1				0.002	0.0044
080	K1211-15210	TIE ROD	1				0.51	1.122
090	K1211-15220	ROD END	2				0.17	0.374
100	02074-50120	NUT	2				0.015	0.033
110	75599-31025	HEX.NUT	2				0.015	0.033
120	75599-33015	WASHER SPRING LOCK	2				0.006	0.0132
130	K1211-15180	ARM KNUCKLE	1				0.42	0.924
140	01073-51060	BOLT	1				0.05	0.11
150	04512-60100	WASHER SPRING	1				0.002	0.0044
160	02018-50100	NUT	1				0.011	0.0242
170	K1211-15220	ROD END	1				0.17	0.374
180	K1211-15280	WASHER KNUCKLE ARM	1				0.001	0.0022
190	75599-33015	WASHER SPRING LOCK	1				0.006	0.0132
200	75599-31025	HEX.NUT	1				0.015	0.033
210	02074-50120	NUT	1				0.015	0.033

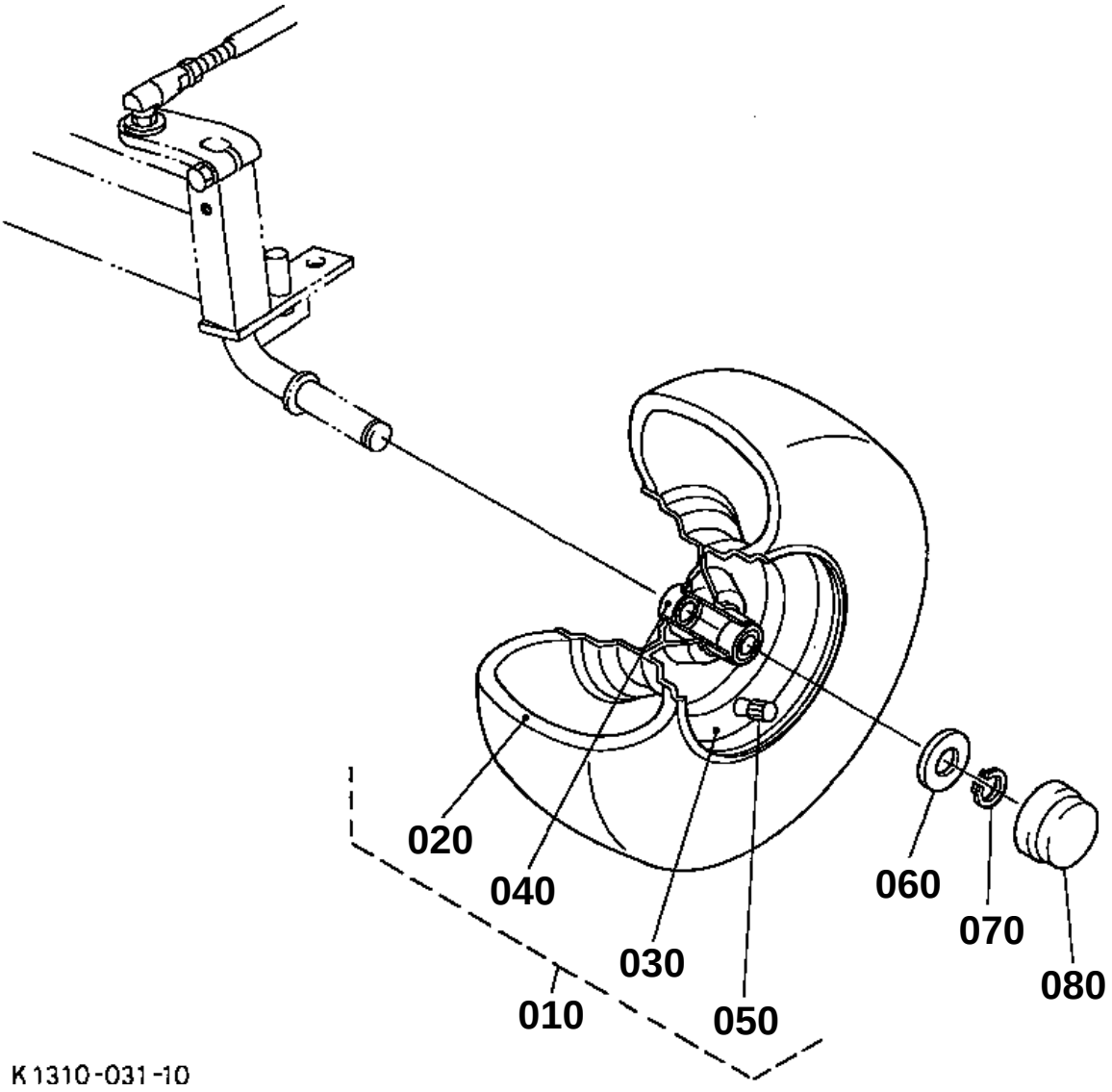
020
040
030
010
050
060
070
080
K1310-031-10

FRONT WHEEL

↔ Interchangeable; ≠ not interchangeable; ← new for old; → old for new

REF.No	Part No.	Description	Q'ty	S.No.	I/C	REMARKS	Weight (kgf)	Weight (lb)
010	K3511-99200	TIRE ASSY	2				6	13.2
020	K3511-99210	TIRE	2				2.95	6.49
030	66120-56430	WHEEL	2				2.89	6.358
040	66120-56440	BEARING BALL	4				0.13	0.286
050	66120-17190	VALVE TIRE	2				0.012	0.0264
060	K1142-11260	WASHER PLAIN	2				0.008	0.0176
070	04612-00250	CIR CLIP EXTERNAL	2				0.002	0.0044
080	K1142-15780	CAP WHEEL FRONT	2				0.03	0.066

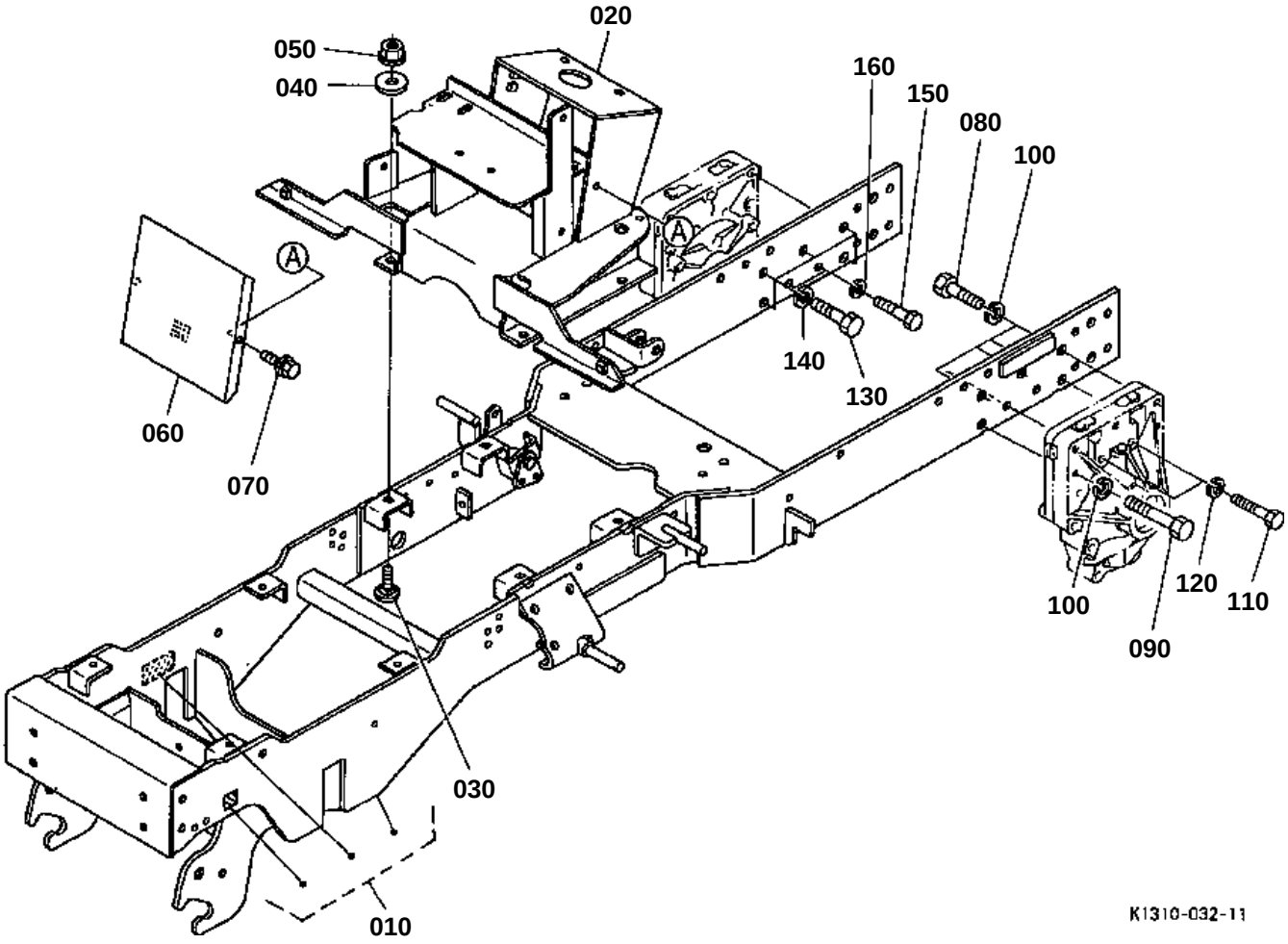
020
050
040
160
150
080
100
A
A
140
130
060
070
100
120
110
090
030
010
K1310-032-11

↔ Interchangeable; ≠ not interchangeable; ← new for old; → old for new

REF.No	Part No.	Description	Q'ty	S.No.	I/C	REMARKS	Weight (kgf)	Weight (lb)
010	K2110-95030	KIT FRAME	1				96	211.2
020	K1211-21110	SUPPORT STEERING	1				12	26.4
030	K1122-91420	BOLT SHORT SQU.NECK	4				0.02	0.044
040	K1122-21160	WASHER PLAIN	4				0.006	0.0132
050	K1122-91960	NUT FLANGE	4				0.012	0.0264
060	K1211-21120	SCREEN AIR INTAKE	1				0.22	0.484
070	01754-50616	BOLT FLANGE	2				0.006	0.0132
080	01053-51255	BOLT	4				0.06	0.132
090	01053-51270	BOLT	1				0.01	0.022
100	04512-60120	WASHER SPRING	5				0.005	0.011
110	01053-51065	BOLT	2				0.05	0.11
120	04512-60100	WASHER SPRING	2				0.002	0.0044
130	01053-51255	BOLT	5				0.06	0.132
140	04512-60120	WASHER SPRING	5				0.005	0.011
150	01053-51055	BOLT	2				0.04	0.088
160	04512-60100	WASHER SPRING	2				0.002	0.0044

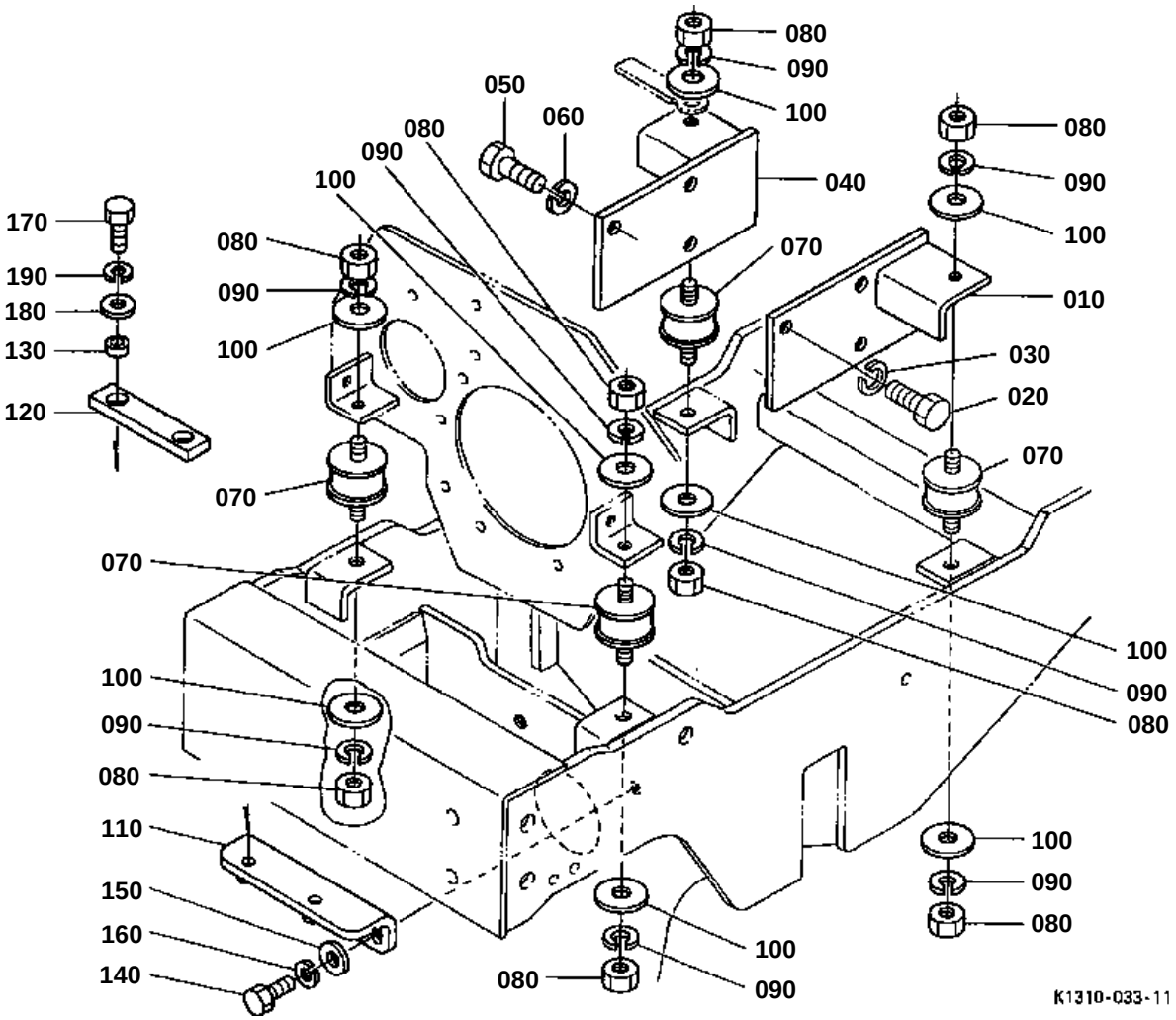
080
090
100
050
060
080
090
100
040
080
090
100
170
190
180
130
120
080
090
100
070
010
030
020
070
070
070
100
090
080
100
090
080
110
150
160
140
100
090
080
100
090
080
K1310-033-11

ENGINE SUPPORT

↔ Interchangeable; ≠ not interchangeable; ← new for old; → old for new

REF.No	Part No.	Description	Q'ty	S.No.	I/C	REMARKS	Weight (kgf)	Weight (lb)
010	K1211-22110	SUPPORT ENGINE LH	1				0.52	1.144
020	01073-51022	BOLT	3				0.024	0.0528
030	04512-50100	WASHER SPRING	3				0	0
040	K1211-22120	SUPPORT ENGINE RH	1				0.5	1.1
050	01073-51022	BOLT	3				0.024	0.0528
060	04512-50100	WASHER SPRING	3				0	0
070	66021-52310	CUSHION RUBBER	4				0.106	0.2332
080	02054-50080	NUT	8				0.005	0.011
090	75599-33012	WASHER SPRING	8				0.002	0.0044
100	75599-32012	WASHER PLAIN	8				0.002	0.0044
110	K1310-22210	BRACKET STOPPER	1				0.455	1.001
120	66021-25170	STOPPER	1				0.01	0.022
130	K1310-22230	COLLAR	2				0.003	0.0066
140	01053-50818	BOLT	2				0.011	0.0242
150	75599-32112	WASHER PLAIN	2				0.001	0.0022
160	75599-33012	WASHER SPRING	2				0.002	0.0044
170	01053-50822	BOLT	2				0.013	0.0286
180	75599-32112	WASHER PLAIN	2				0.001	0.0022
190	75599-33012	WASHER SPRING	2				0.002	0.0044

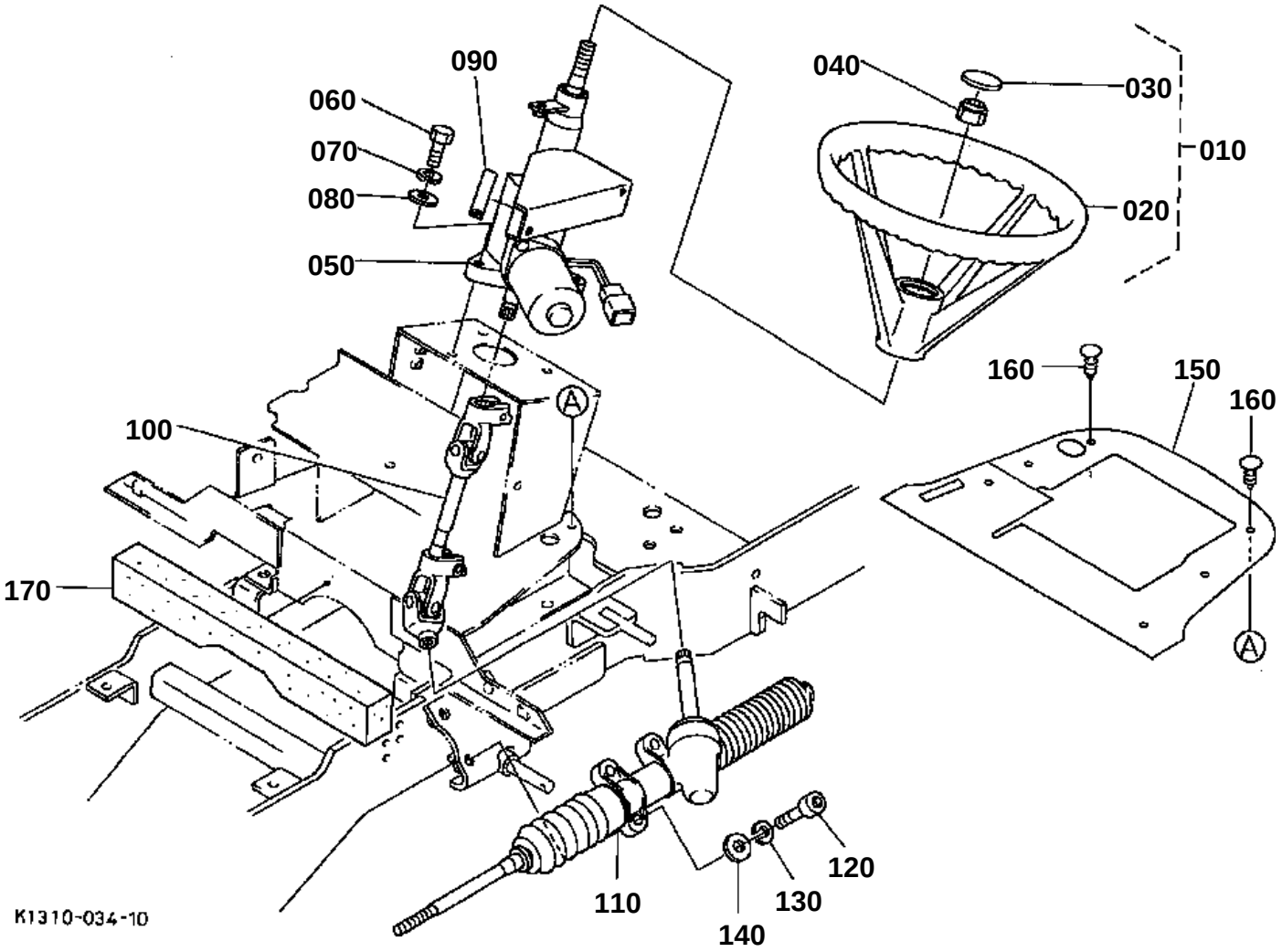
090
060
070
080
050
040
030
010
020
160
150
160
100
170
120
110
130
140
K1310-034-10

↔ Interchangeable; ≠ not interchangeable; ← new for old; → old for new

REF.No	Part No.	Description	Q'ty	S.No.	I/C	REMARKS	Weight (kgf)	Weight (lb)
010	K1122-41110	ASSY WHEEL STEERING	1				1.6	3.52
020	K1122-41120	WHEEL STEERING	1				1.6	3.52
030	K1122-41130	CAP STEERING	1				0.006	0.0132
040	K1122-91940	NUT LOCKING	1				0.03	0.066
050	K1211-41510	ASSY STEERING POWER	1				4.35	9.57
060	01053-51035	BOLT	3				0.03	0.066
070	04512-60100	WASHER SPRING	3				0.002	0.0044
080	75599-32013	WASHER PLAIN	3				0.03	0.066
090	K1211-41650	GUARD	1				0.012	0.0264
100	K1211-41530	UNIVERSAL JOINT	1				0.82	1.804
110	K1211-41520	GEARCASE POWER STEE.	1				2.36	5.192
120	K1211-91040	BOLT SHCS	3				0.03	0.066
130	04512-60100	WASHER SPRING	3				0.002	0.0044
140	75599-32013	WASHER PLAIN	3				0.03	0.066
150	K1211-84550	DUSTPROOF	1				0.17	0.374
160	K1211-84560	PUSH RIVET	6				0.002	0.0044
170	K1211-84580	TAPE DUSTPROOF	1				0.045	0.099

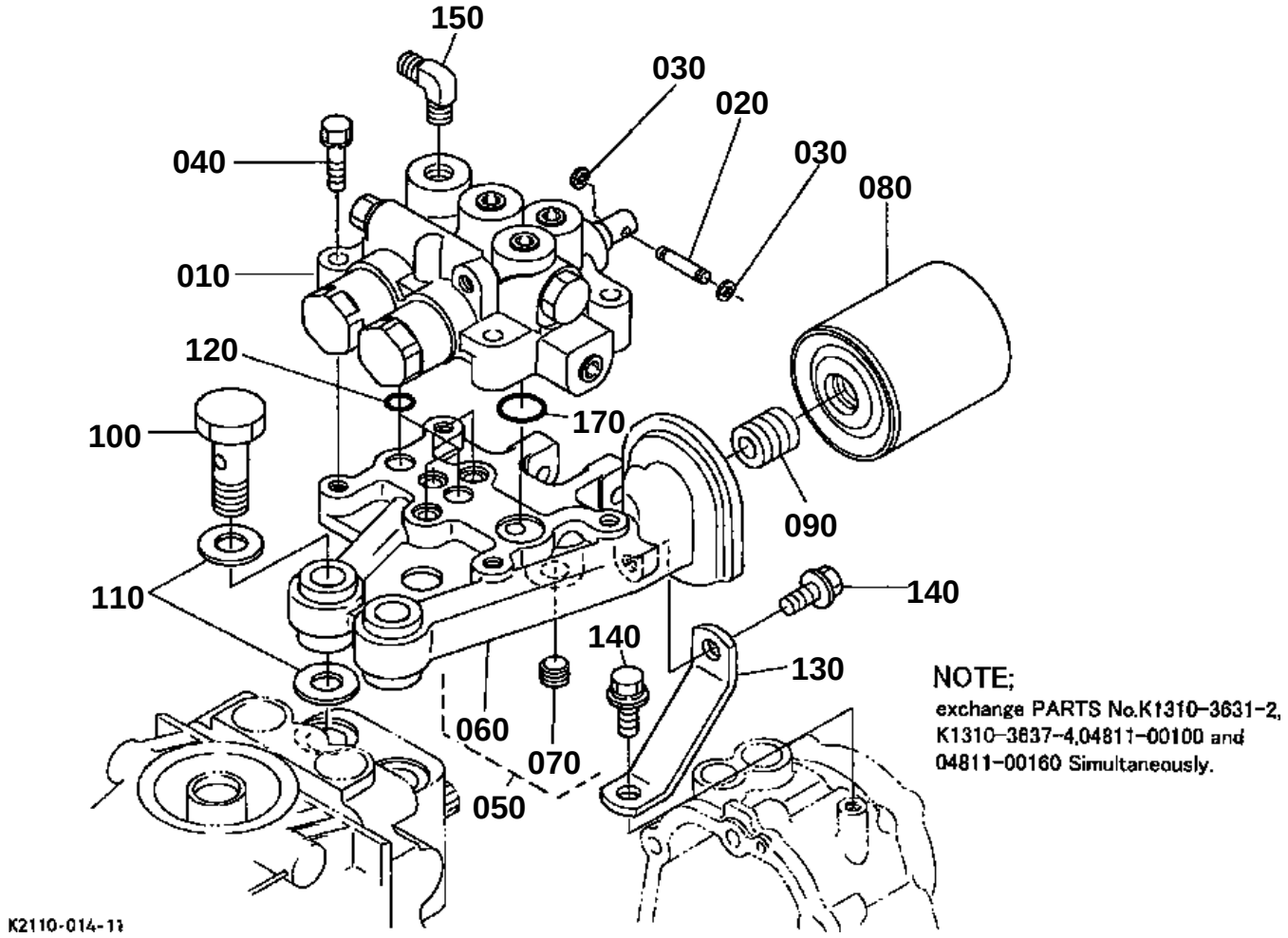
150
030
020
030
080
040
010
120
170
100
090
110
140
140
130
060
070
050
NOTE;
exchange PARTS No.K1310-3631-2,
K1310-3637-4,04811-00100 and
04811-00160 Simultaneously.
K2110-014-11

010 K1310-3631-0
160 K1310-3629-0

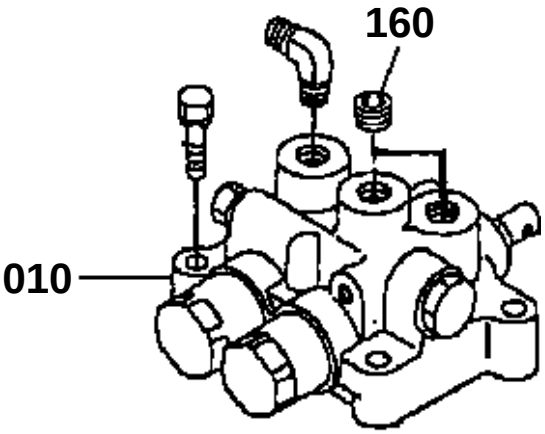

K2110-801-10

↔ Interchangeable; ≠ not interchangeable; ← new for old; → old for new

REF.No	Part No.	Description	Q'ty	S.No.	I/C	REMARKS	Weight (kgf)	Weight (lb)
010	K1310-36310	ASSY VALVE CONTROL	1	<=10061		REFER TO Fig.No.F015 FOR COMPONENTS.	2.68	5.896
010	K1310-36312	ASSY VALVE CONTROL	1	>=10062	≠	REFER TO Fig.No.F01501 FOR COMPONENTS.	0	0
010	K1310-36313	ASSY VALVE CONTROL	1	>=10386	←	REFER TO Fig.No.F01501 FOR COMPONENTS.	2.9	6.38
020	K1310-36380	PIN LEVER	2				0.007	0.0154
030	04613-50050	CIR CLIP EXTERNAL	4				0.001	0.0022
040	01123-50845	BOLT	4				0.02	0.044
050	K1310-36364	ASSY ADAPTER(CV)	1	>=10062		NOT SALE	0	0
060	K1310-36370	ADAPTER(CV)	1	<=10061		NOT SALE. SEE NOTE	1.86	4.092
060	K1310-36374	ADAPTER(CV)	1	>=10062	≠		1.95	4.29
070	K1310-36390	PLUG	1				0.01	0.022
080	K2561-36990	CARTRIDGE OIL FILTER	1				0.38	0.836
090	66204-36170	JOINT FILTER	1				0.018	0.0396
100	K1310-36610	BOLT(ADAPTER)	2				0.1	0.22
110	K1310-36620	PACKING	4				0.003	0.0066
120	04811-00090	O RING	6	<=10061			0	0
120	04811-00100	O RING	5	>=10062			0	0
120	04816-00100	O RING	5		←		0.01	0.022
130	K1310-36640	STAY(ADAPTER)	1				0.075	0.165
140	01125-60816	BOLT	2				0.01	0.022
150	K1310-63150	ADAPTER	1				0.05	0.11
160	K1310-36290	PLUG	2	<=10061			0	0
170	04811-00160	O RING	1				0	0
170	04817-00160	O RING	1		←		0.001	0.0022

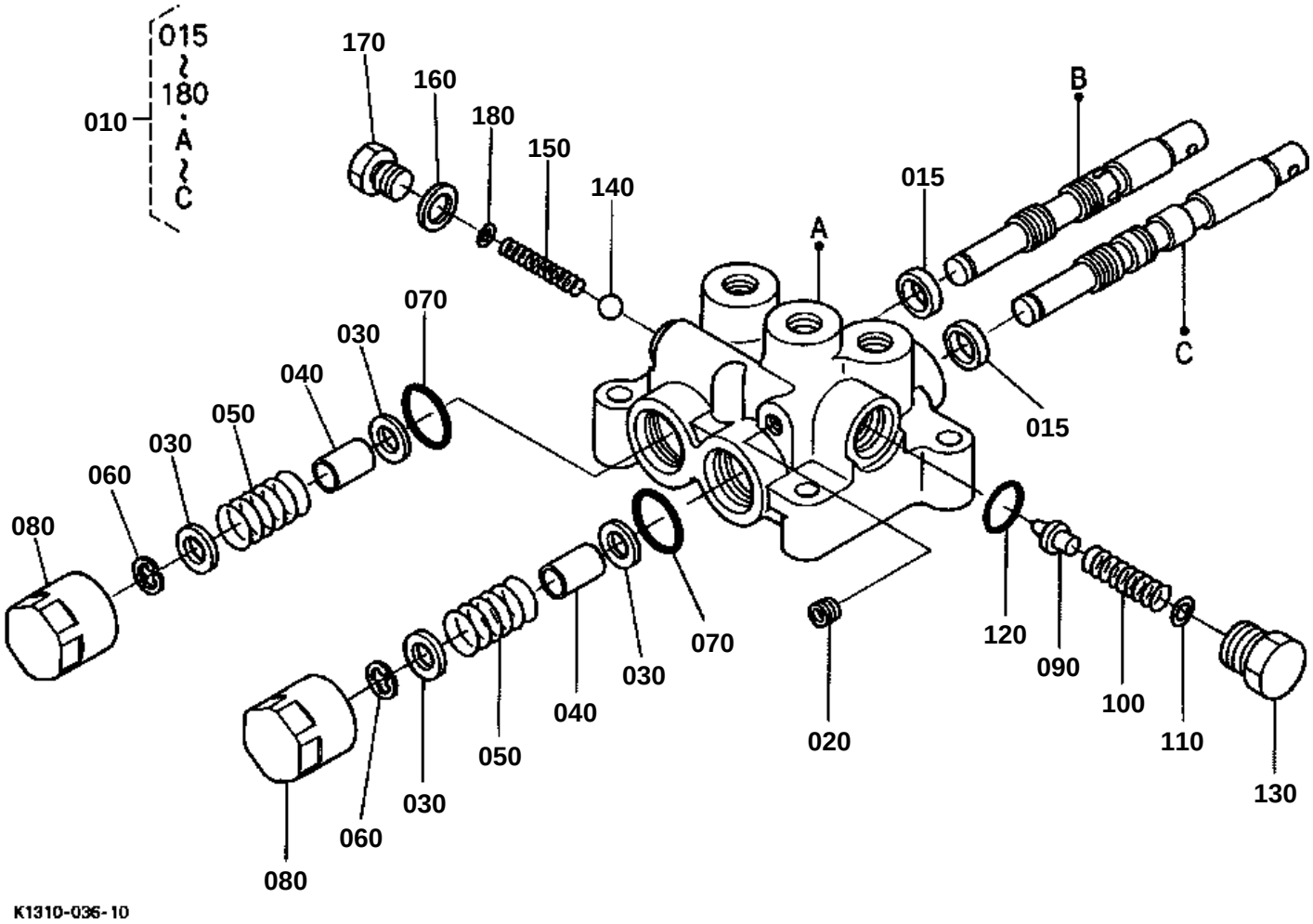
015
~
180
010
A
~
C
170
160
180
150
140
B
015
A
C
070
030
040
050
030
060
080
015
120
090
100
110
130
070
030
040
050
030
060
080
020
K1310-036-10

↔ Interchangeable; ≠ not interchangeable; ← new for old; → old for new

REF.No	Part No.	Description	Q'ty	S.No.	I/C	REMARKS	Weight (kgf)	Weight (lb)
010	K1310-36310	ASSY VALVE CONTROL	1				2.68	5.896
015	45403-72630	GASKET	2				0.001	0.0022
020	67148-36770	PLUG SCREW	1				0.001	0.0022
030	04011-50100	WASHER PLAIN	4				0.002	0.0044
040	K1310-86130	COLLAR	2				0.011	0.0242
050	K1310-86140	SPRING RETURN	2				0.01	0.022
060	04613-50070	CIR CLIP EXTERNAL	2				0.001	0.0022
070	04811-00220	O RING	2				0	0
070	04816-00220	O RING	2		←		0.003	0.0066
080	K1310-86150	PLUG	2				0.11	0.242
090	67156-36620	POPPET	1				0.002	0.0044
100	K1310-86170	SPRING MAIN	1				0.004	0.0088
110	48100-36270	SHIM	1			0.3mm	0.001	0.0022
110	48100-36280	SHIM	1			0.2mm	0.001	0.0022
120	04811-00160	O RING	1				0	0
120	04816-00160	O RING	1		←		0.003	0.0066
130	K1310-86180	PLUG MAIN	1				0	0
140	07715-01605	BALL	1				0.003	0.0066
150	66101-36220	SPRING	1				0.005	0.011
160	04717-01200	WASHER WITH RUBBER	1				0.002	0.0044
170	06331-35012	PLUG	1				0.022	0.0484
180	66101-36230	SHIM	1			0.5mm	0.003	0.0066
180	66101-36240	SHIM	1			0.3mm	0.003	0.0066

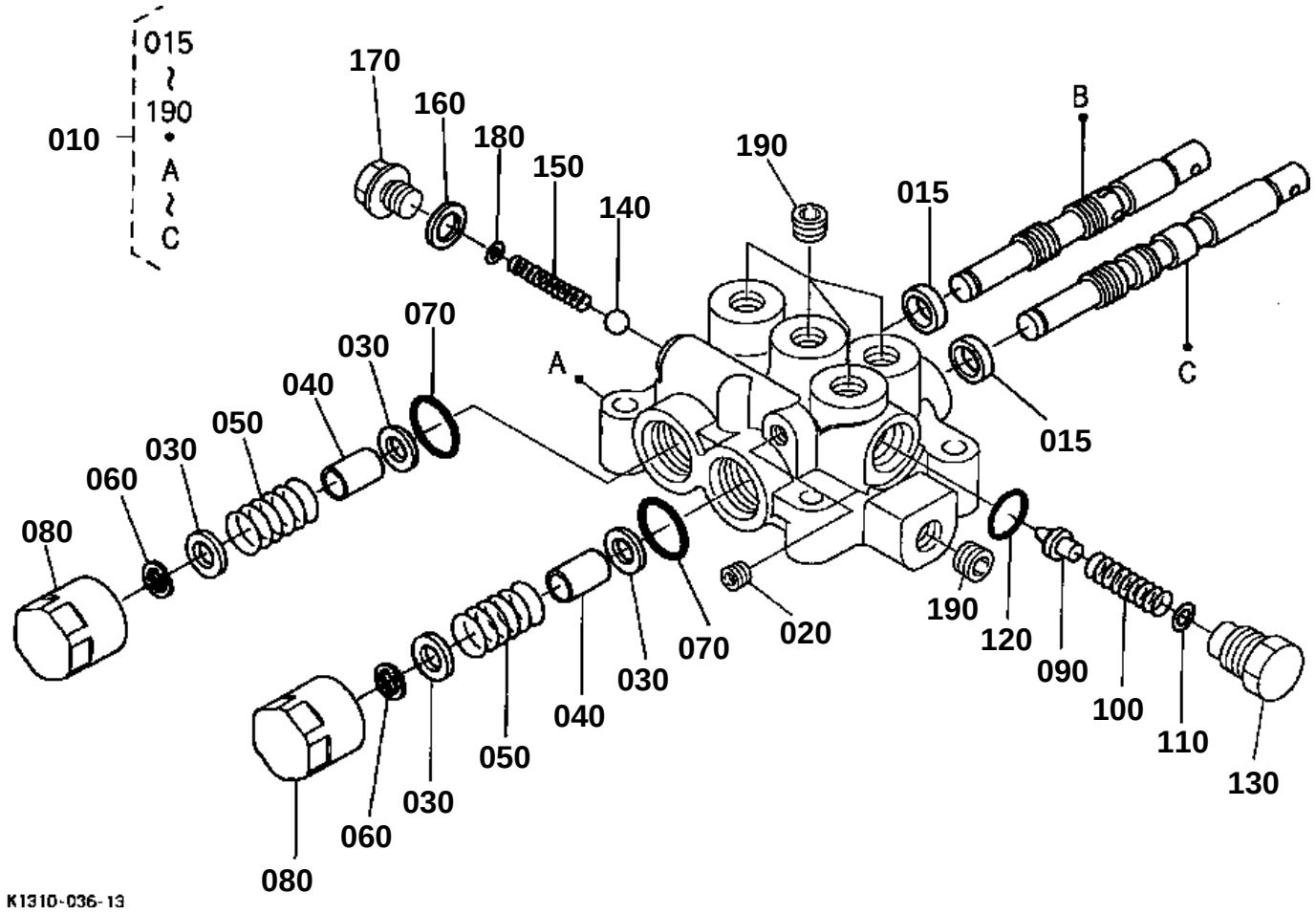
015
~
190
010
A
~
C
170
160
180
150
140
190
015
B
C
A
070
030
040
050
030
060
080
015
190
120
090
100
110
130
020
070
030
040
050
030
060
080
K1310-036-13

↔ Interchangeable; ≠ not interchangeable; ← new for old; → old for new

REF.No	Part No.	Description	Q'ty	S.No.	I/C	REMARKS	Weight (kgf)	Weight (lb)
010	K1310-36312	ASSY VALVE CONTROL	1	<=30385			0	0
010	K1310-36313	ASSY VALVE CONTROL	1	>=10386	←		2.9	6.38
015	45403-72630	GASKET	2				0.001	0.0022
020	67148-36770	PLUG SCREW	1				0.001	0.0022
030	04011-50100	WASHER PLAIN	4				0.002	0.0044
040	K1310-86130	COLLAR	2				0.011	0.0242
050	K1310-86140	SPRING RETURN	2				0.01	0.022
060	04613-50070	CIR CLIP EXTERNAL	2				0.001	0.0022
070	04811-00220	O RING	2				0	0
070	04816-00220	O RING	2		←		0.003	0.0066
080	K1310-86150	PLUG	2				0.11	0.242
090	67156-36620	POPPET	1				0.002	0.0044
100	K1310-86170	SPRING MAIN	1				0.004	0.0088
110	48100-36270	SHIM	1			0.3mm	0.001	0.0022
110	48100-36280	SHIM	1			0.2mm	0.001	0.0022
120	04811-00160	O RING	1				0	0
120	04816-00160	O RING	1		←		0.003	0.0066
130	K1310-86280	PLUG MAIN	1				0.05	0.11
140	07715-01605	BALL	1				0.003	0.0066
150	66101-36220	SPRING	1				0.005	0.011
160	04717-01200	WASHER WITH RUBBER	1				0.002	0.0044
170	06331-45012	PLUG	1				0.028	0.0616
180	66101-36230	SHIM	1			0.5mm	0.003	0.0066
180	66101-36240	SHIM	1			0.3mm	0.003	0.0066
190	K1310-36290	PLUG	5	<=10385			0	0
190	K1310-36292	PLUG	5	>=10386	←		0.009	0.0198

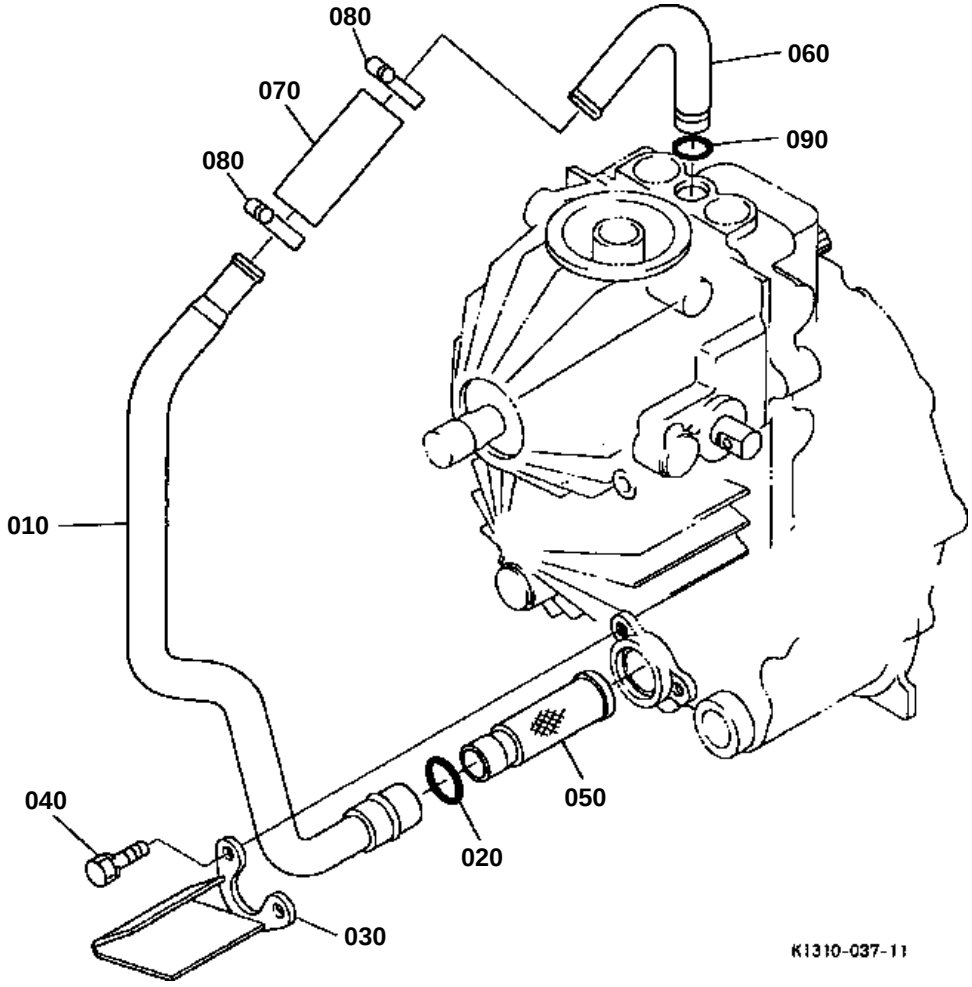
080
060
070
090
080
010
050
040
020
030
K1310-037-11

HYDRAULIC OIL LINE (SUCTION)

↔ Interchangeable; ≠ not interchangeable; ← new for old; → old for new

REF.No	Part No.	Description	Q'ty	S.No.	I/C	REMARKS	Weight (kgf)	Weight (lb)
010	K1310-36410	PIPE SUCTION	1				0.235	0.517
020	04811-06220	O RING	1				0	0
020	04817-06220	O RING	1		←		0	0
030	K1310-36433	PLATE STOPPER	1				0.168	0.3696
040	01123-60816	BOLT	2				0.01	0.022
050	K1310-36490	FILTER	1				0.03	0.066
060	K1310-36420	PIPE SUCTION	1				0.06	0.132
070	K1310-36480	HOSE	1				0.026	0.0572
080	09318-88230	CLAMP HOSE	2				0.008	0.0176
090	04811-00110	O RING	1				0	0
090	04817-00110	O RING	1		←		0.001	0.0022

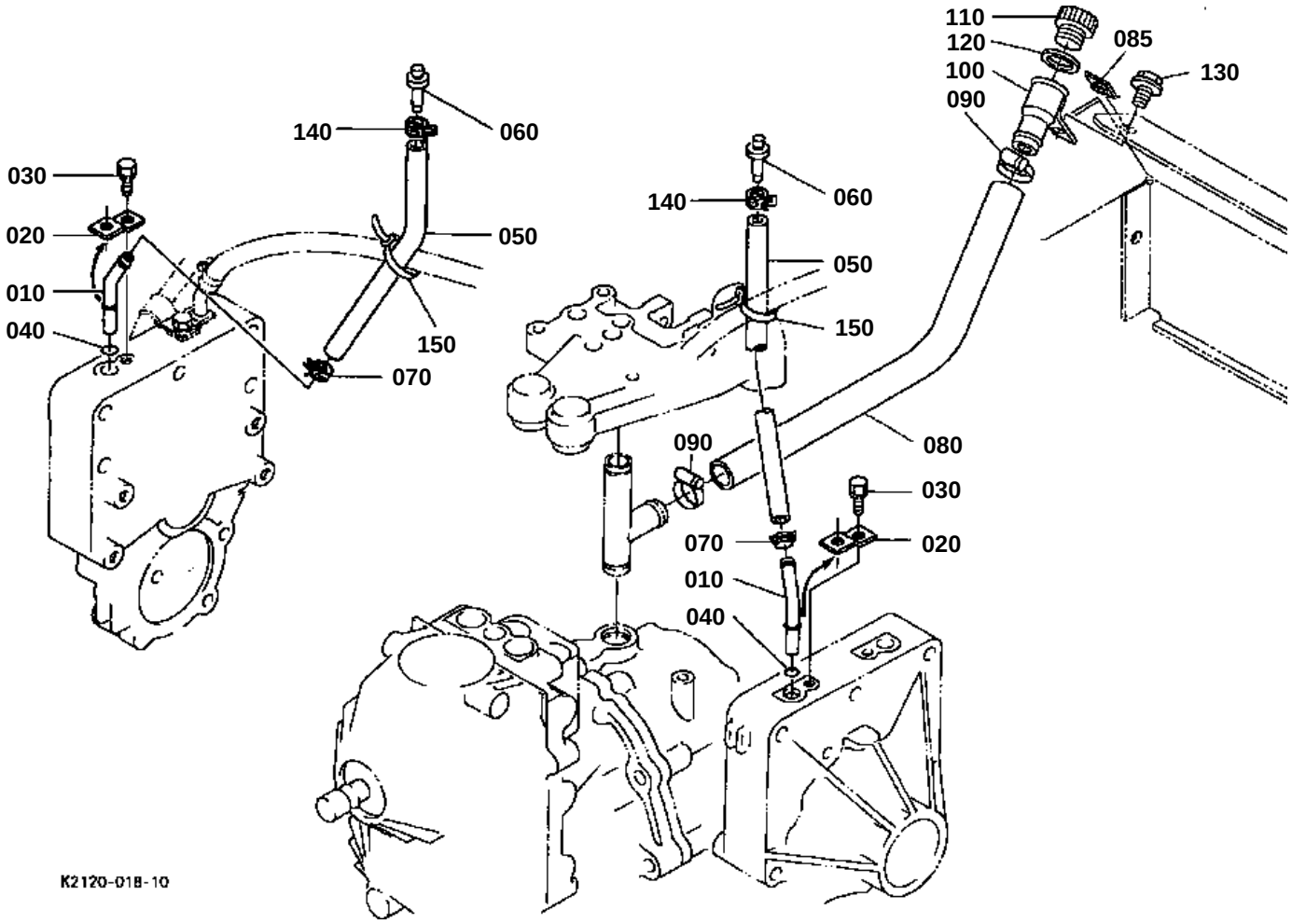
110
120
085
100
130
090
140
060
030
020
050
010
040
150
070
140
060
050
150
090
080
030
070
020
010
040
K2120-018-10

HYDRAULIC OIL LINE(BREATHER)

↔ Interchangeable; ≠ not interchangeable; ← new for old; → old for new

REF.No	Part No.	Description	Q'ty	S.No.	I/C	REMARKS	Weight (kgf)	Weight (lb)
010	K1310-36760	ADAPTER DRAIN	2				0.017	0.0374
020	K1310-36770	PLATE(ADAPTER)	2				0.01	0.022
030	01123-60816	BOLT	2				0.01	0.022
040	04811-00100	O RING	2				0	0
040	04816-00100	O RING	2		←		0.01	0.022
050	K1310-36750	HOSE BREATHER	2				0.02	0.044
060	K2561-36330	BREATHER	2				0.008	0.0176
070	09318-88130	CLAMP HOSE	2				0.002	0.0044
080	K2110-36670	HOSE(T/M)	1				0.07	0.154
085	K1122-91810	NUT(M)	1				0.01	0.022
090	09318-88200	CLAMP HOSE	2				0.004	0.0088
100	K1310-36660	ADAPTER(T/M)	1				0.06	0.132
110	06324-50020	PLUG OIL FILLER	1				0.016	0.0352
120	04721-00200	GASKET	1				0.002	0.0044
130	01754-50816	BOLT FLANGE	1				0.011	0.0242
140	09318-88125	CLAMP HOSE	2				0.001	0.0022
150	K1122-61230	CLAMP CORD	2				0.001	0.0022

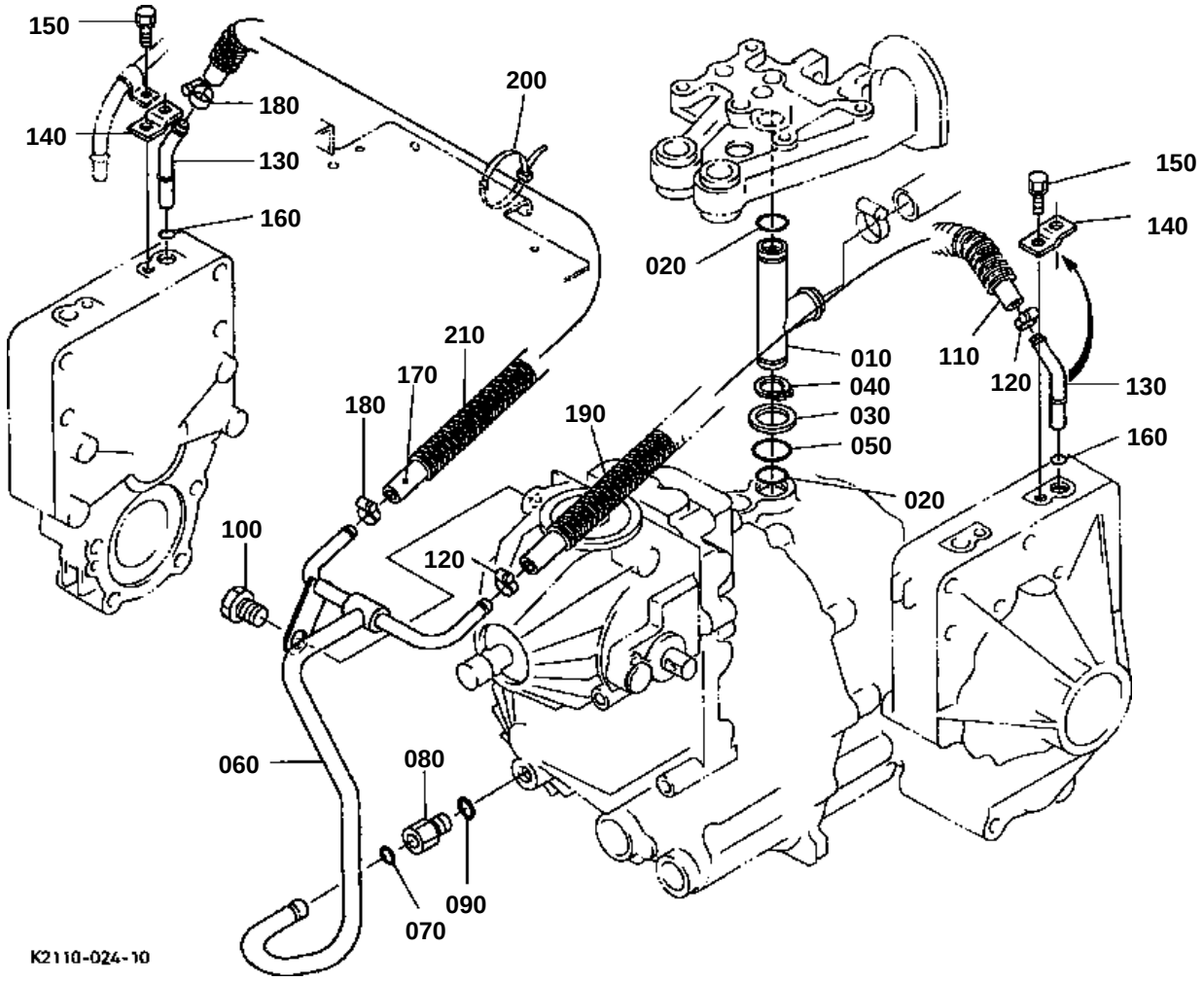
150
180
140
130
160
200
020
150
140
210
010
110
170
040
120
130
180
190
030
050
160
020
100
120
060
080
090
070
K2110-024-10

HYDRAULIC OIL LINE(DRAIN)

↔ Interchangeable; ≠ not interchangeable; ← new for old; → old for new

REF.No	Part No.	Description	Q'ty	S.No.	I/C	REMARKS	Weight (kgf)	Weight (lb)
010	K1310-36650	PIPE DRAIN	1				0.07	0.154
020	04811-00150	O RING	2				0	0
020	04817-00150	O RING	2		←		0.001	0.0022
030	K1310-36680	WASHER PLAIN	1				0.006	0.0132
040	04612-00190	CIR CLIP EXTERNAL	1				0.001	0.0022
050	04811-06190	O RING	1				0	0
050	04817-06190	O RING	1		←		0	0
060	K1310-36710	PIPE DRAIN	1				0.2	0.44
070	04811-10100	O RING	1				0.001	0.0022
080	66101-36463	PLUG DRAIN	1				0.046	0.1012
090	68011-62220	O RING	1				0.001	0.0022
100	66101-36140	BOLT	1				0.04	0.088
110	K1310-36740	HOSE	1				0.039	0.0858
120	09318-88130	CLAMP HOSE	2				0.002	0.0044
130	K1310-36760	ADAPTER DRAIN	2				0.017	0.0374
140	K1310-36770	PLATE(ADAPTER)	2				0.01	0.022
150	01123-60816	BOLT	2				0.01	0.022
160	04811-00100	O RING	2				0	0
160	04817-00100	O RING	2		←		0.001	0.0022
170	K1310-36730	HOSE	1				0.08	0.176
180	09318-88130	CLAMP HOSE	2				0.002	0.0044
190	K1142-24220	CONVOLUTED CONDUIT	1				0.014	0.0308
200	K1122-61230	CABLE TIE	1				0.001	0.0022
210	K1310-24220	CONVOLUTED CONDUIT	1				0.017	0.0374

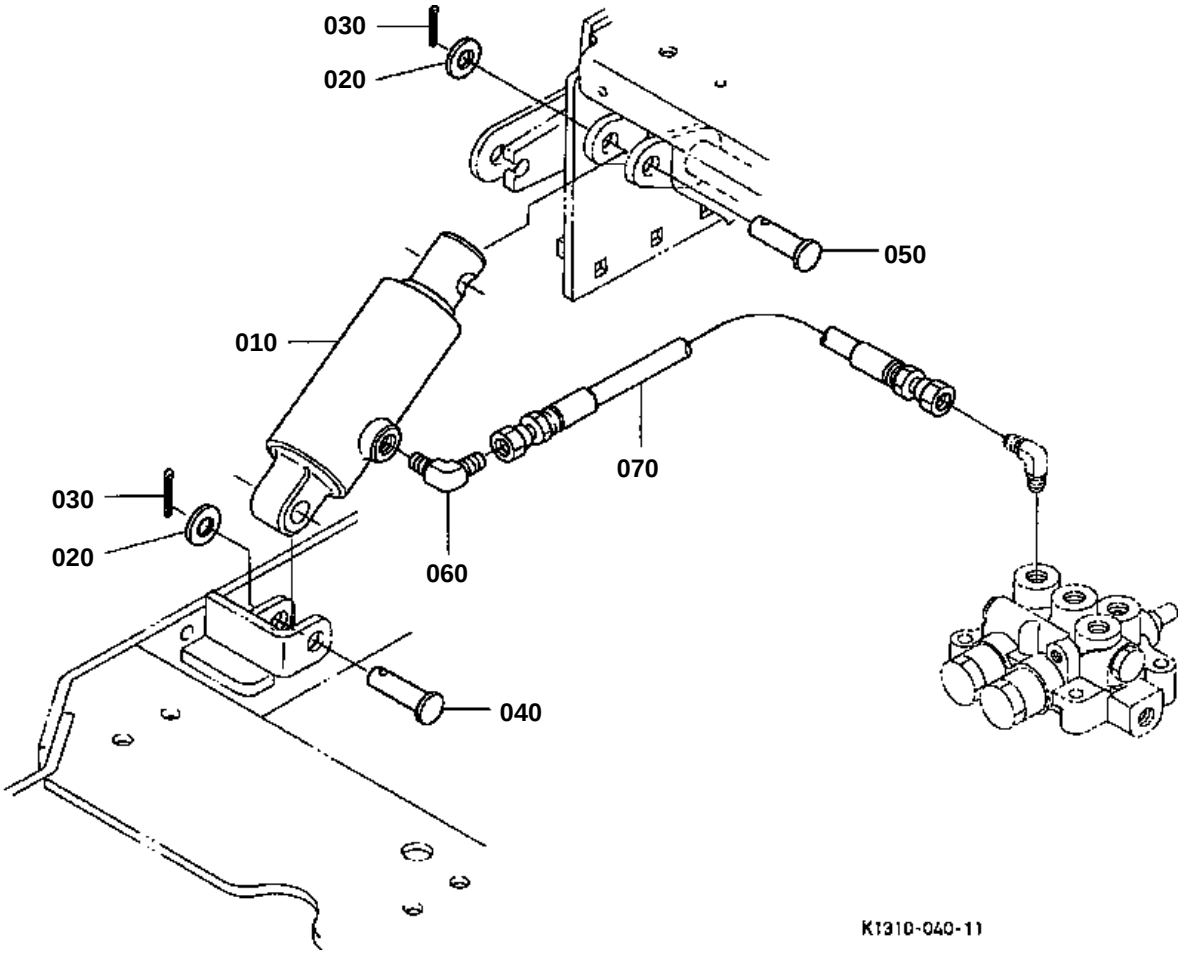
030
020
050
010
070
030
020
060
040
K1310-040-11

↔ Interchangeable; ≠ not interchangeable; ← new for old; → old for new

REF.No	Part No.	Description	Q'ty	S.No.	I/C	REMARKS	Weight (kgf)	Weight (lb)
010	K1310-36510	ASSY CYLINDER	1				2.91	6.402
020	75599-32016	WASHER PLAIN	2				0.009	0.0198
030	05511-50425	PIN SPLIT	2				0.003	0.0066
040	05122-51455	PIN JOINT	1				0.068	0.1496
050	05122-51465	PIN JOINT	1				0.08	0.176
060	K1310-63150	ADAPTER	1				0.05	0.11
070	K1310-36520	HOSE CYLINDER	1				0.17	0.374

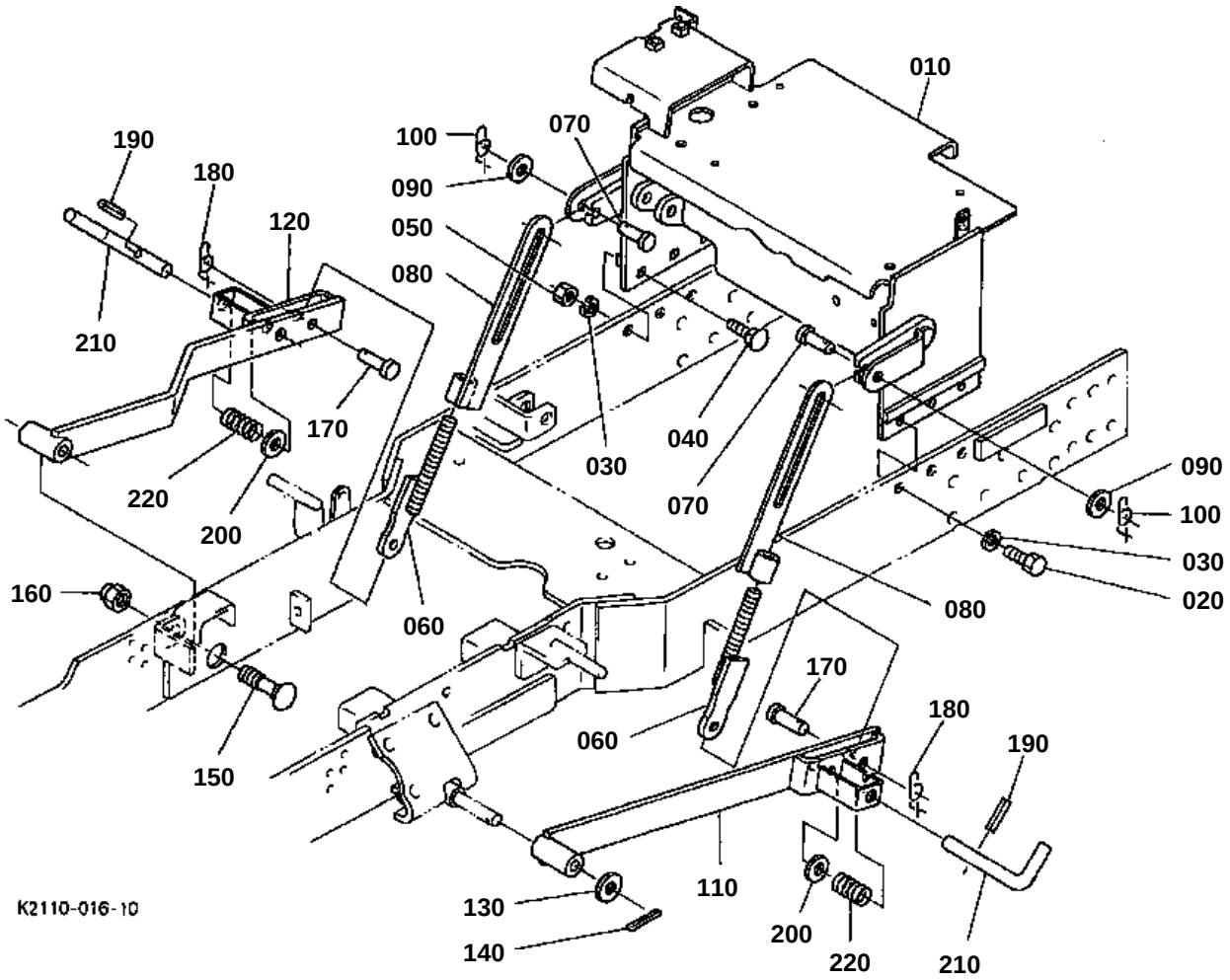
010
190
180
120
100
070
090
050
080
210
170
220
200
160
150
030
040
070
060
090
100
030
020
080
170
180
190
060
110
130
140
200
220
210
K2110-016-10

LIFT LINK

↔ Interchangeable; ≠ not interchangeable; ← new for old; → old for new

REF.No	Part No.	Description	Q'ty	S.No.	I/C	REMARKS	Weight (kgf)	Weight (lb)
010	K1310-21020	SUPPORT LIFT LINK	1				13	28.6
020	01053-51030	BOLT	3				0.027	0.0594
030	04512-60100	WASHER SPRING	6				0.002	0.0044
040	K1310-91000	BOLT SQU.NECK	3				0.026	0.0572
050	02014-50100	NUT	3				0.011	0.0242
060	K1310-44270	LINK LIFT LOWER	2				0.33	0.726
070	75599-51530	PIN CLEVIS	2				0.042	0.0924
080	K2110-44280	LINK LIFT UPPER	2				0.53	1.166
090	75599-32115	WASHER PLAIN	2				0.02	0.044
100	K1211-91140	RUE RING COTTER	2				0.002	0.0044
110	K1310-44320	LINK REAR LH	1				1.95	4.29
120	K1310-44330	LINK REAR RH	1				1.98	4.356
130	04013-60160	WASHER PLAIN	1				0.01	0.022
140	05511-50425	PIN SPLIT	1				0.003	0.0066
150	K1211-91690	BOLT SHORT SQU.NECK	1				0.11	0.242
160	K1211-91930	NUT	1				0.03	0.066
170	75599-51530	PIN CLEVIS	2				0.042	0.0924
180	K1211-91140	RUE RING COTTER	2				0.002	0.0044
190	75599-52532	PIN SPRING	2				0.005	0.011
200	75599-32016	WASHER PLAIN	2				0.009	0.0198
210	K5651-44650	PIN REAR	2				0.2	0.44
220	K5651-44670	SPRING PIN	2				0.21	0.462

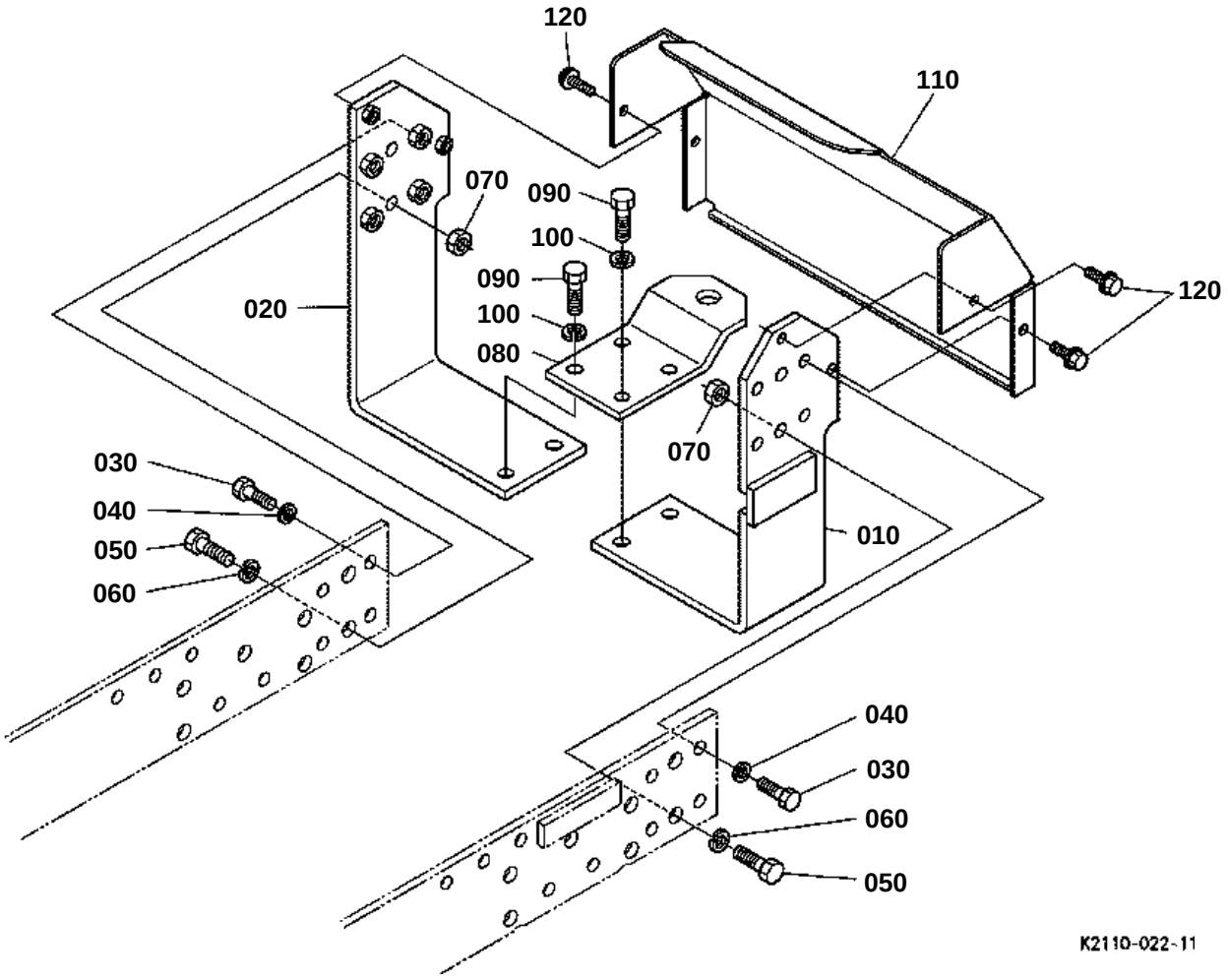
120
110
070
090
100
090
100
080
020
120
070
030
040
050
060
010
040
030
060
050
K2110-022-11

080 K2110-2107-0

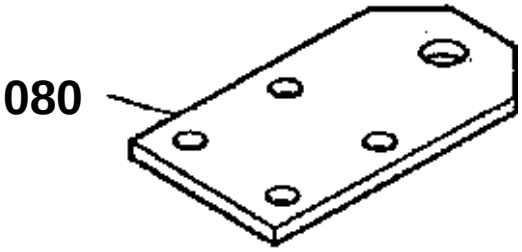

K2110-804-10

↔ Interchangeable; ≠ not interchangeable; ← new for old; → old for new

REF.No	Part No.	Description	Q'ty	S.No.	I/C	REMARKS	Weight (kgf)	Weight (lb)
010	K2110-21040	FRAME REAR LH	1				3.26	7.172
020	K2110-21050	FRAME REAR RH	1				3	6.6
030	01073-51030	BOLT	8				0.028	0.0616
040	04512-50100	WASHER SPRING	8				0	0
050	01053-51235	BOLT	4				0.042	0.0924
060	04512-50120	WASHER SPRING	4				0	0
070	02054-50120	NUT	4				0.018	0.0396
080	K2110-21070	HITCH	1	<=10316			0	0
080	K2110-21072	HITCH	1	>=10317	←		0.9	1.98
090	01053-51235	BOLT	4				0.042	0.0924
100	04512-50120	WASHER SPRING	4				0	0
110	K2110-21063	COVER REAR	1				1.715	3.773
120	01754-50820	BOLT FLANGE	4				0.015	0.033

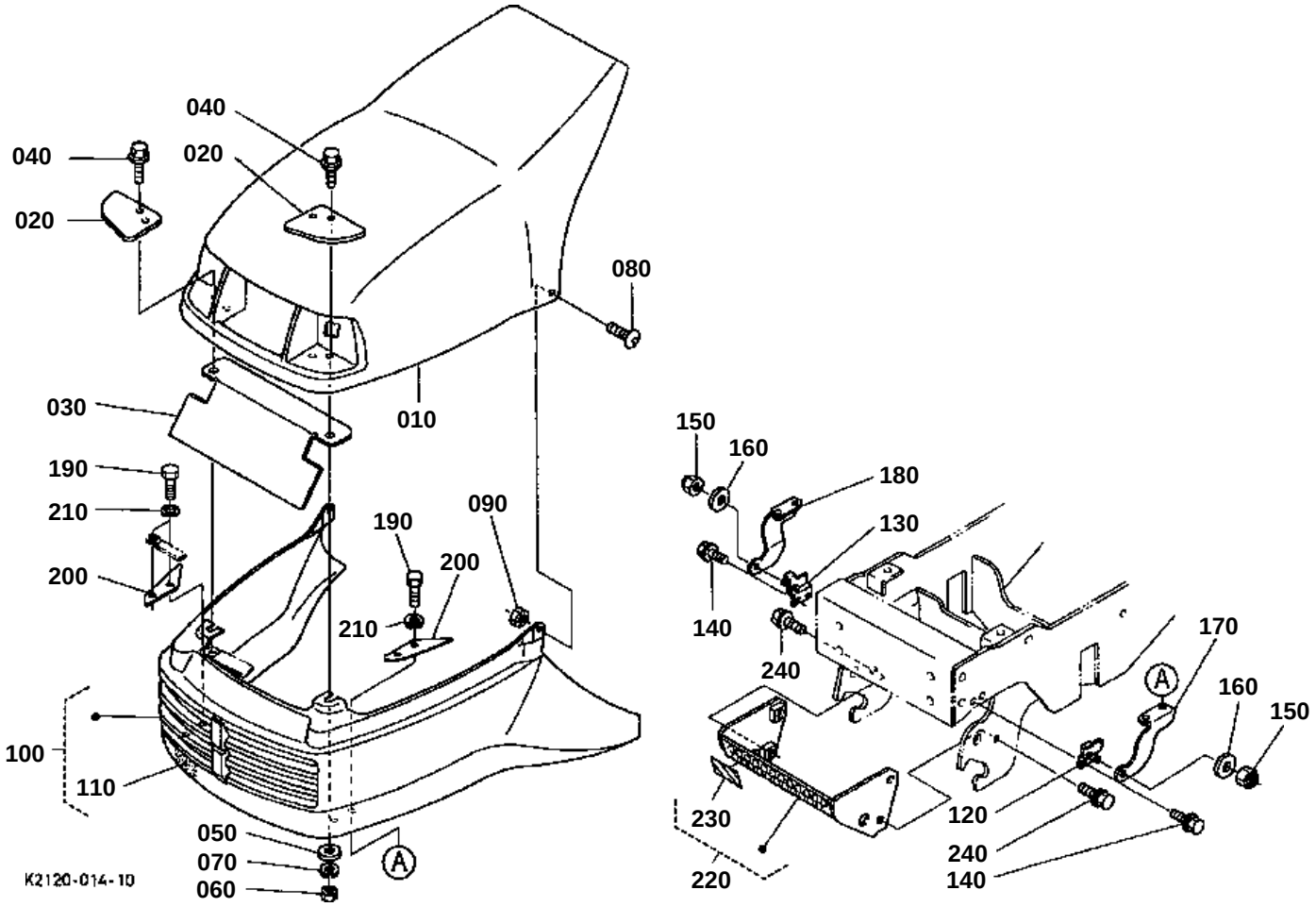
040
020
040
020
080
010
030
190
210
200
190
090
200
210
100
110
050
070
060
A
K2120-014-10
150
160
180
130
140
240
170
A
160
150
230
220
120
240
140

↔ Interchangeable; ≠ not interchangeable; ← new for old; → old for new

REF.No	Part No.	Description	Q'ty	S.No.	I/C	REMARKS	Weight (kgf)	Weight (lb)
010	K1211-54110	BONNET UPPER	1				6.2	13.64
020	K1122-54230	PLATE BONNET	2				0.04	0.088
030	K2120-83130	COVER MUFFLER	1				0.42	0.924
040	K1211-91070	BOLT FLANGE SILVER	2				0.015	0.033
050	75599-32112	WASHER PLAIN	2				0.001	0.0022
060	02054-50080	NUT	2				0.005	0.011
070	75599-33012	WASHER SPRING	2				0.002	0.0044
080	K1211-54360	SCREW BUTTON	2				0.01	0.022
090	K1211-54370	NUT PULL	2				0.002	0.0044
100	K2110-95520	KIT BONNET UNDER	1				4.2	9.24
110	K2561-65420	LABEL HOT CAUTION	1			NOT SALE ORDER BY Fig.No.G100-430	0	0
120	K1211-54330	STAY BONNET LH	1				0.065	0.143
130	K1211-54340	STAY BONNET RH	1				0.065	0.143
140	01754-50820	BOLT FLANGE	4				0.015	0.033
150	75599-31923	NUT LOCKING	2				0.007	0.0154
160	75599-32013	WASHER PLAIN	2				0.03	0.066
170	K1211-54310	BRACKET BONNET LH	1				0.22	0.484
180	K1211-54320	BRACKET BONNET RH	1				0.225	0.495
190	01053-50830	BOLT	4				0.015	0.033
200	K1211-54350	PLATE BONNET FIX.	2				0.075	0.165
210	75599-33012	WASHER SPRING	4				0.002	0.0044
220	K2120-95530	KIT FRONT COVER	1				0.5	1.1
230	K2110-65740	LABEL MOW CAUTION	1			NOT SALE ORDER BY Fig.No.G100-430	0	0
240	01754-50816	BOLT FLANGE	3				0.011	0.0242

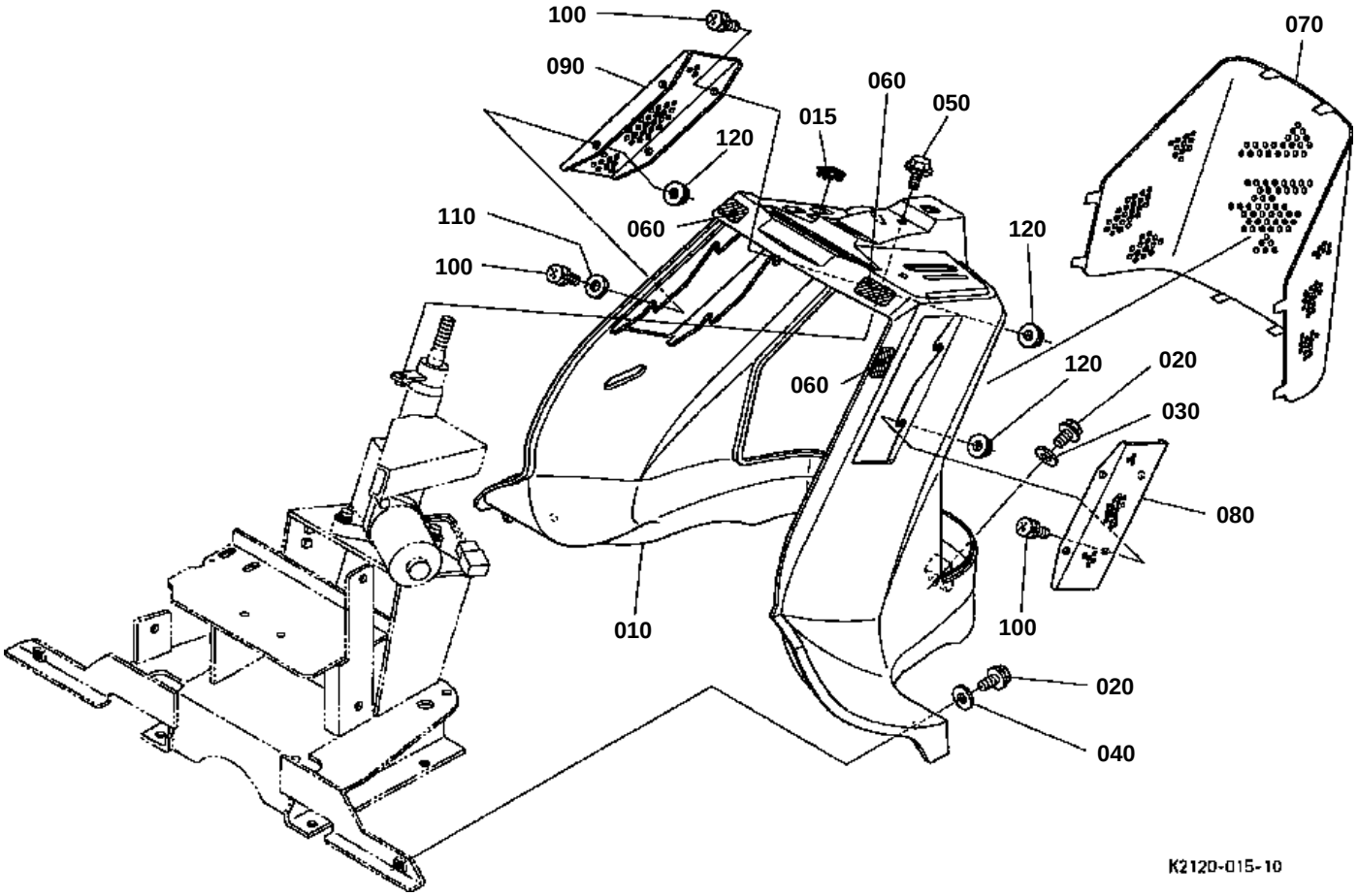
100
090
120
110
100
060
015
060
050
070
120
120
060
020
030
080
010
100
020
040
K2120-015-10

PANEL

↔ Interchangeable; ≠ not interchangeable; ← new for old; → old for new

REF.No	Part No.	Description	Q'ty	S.No.	I/C	REMARKS	Weight (kgf)	Weight (lb)
010	K2120-57110	PANEL	1				5	11
015	K1310-57150	CAP	1				0.011	0.0242
020	01754-50820	BOLT FLANGE	4				0.015	0.033
030	K1122-57170	WASHER PANEL	2				0.001	0.0022
040	K5112-72830	WASHER PLAIN	2				0.005	0.011
050	K1122-91050	BOLT FLANGE BLACK	1				0.013	0.0286
060	K1122-57160	PLATE RUBBER	4				0.001	0.0022
070	K1211-57120	SCREEN AIR INTAKE	1				1	2.2
080	K1211-57130	SCREEN AIR INTAKE LH	1				0.105	0.231
090	K1211-57140	SCREEN AIR INTAKE RH	1				0.1	0.22
100	03004-50616	SCREW WITH WASHER	8				0.006	0.0132
110	75599-32010	WASHER PLAIN	4				0	0
120	02751-50060	NUT FLANGE	8				0.005	0.011

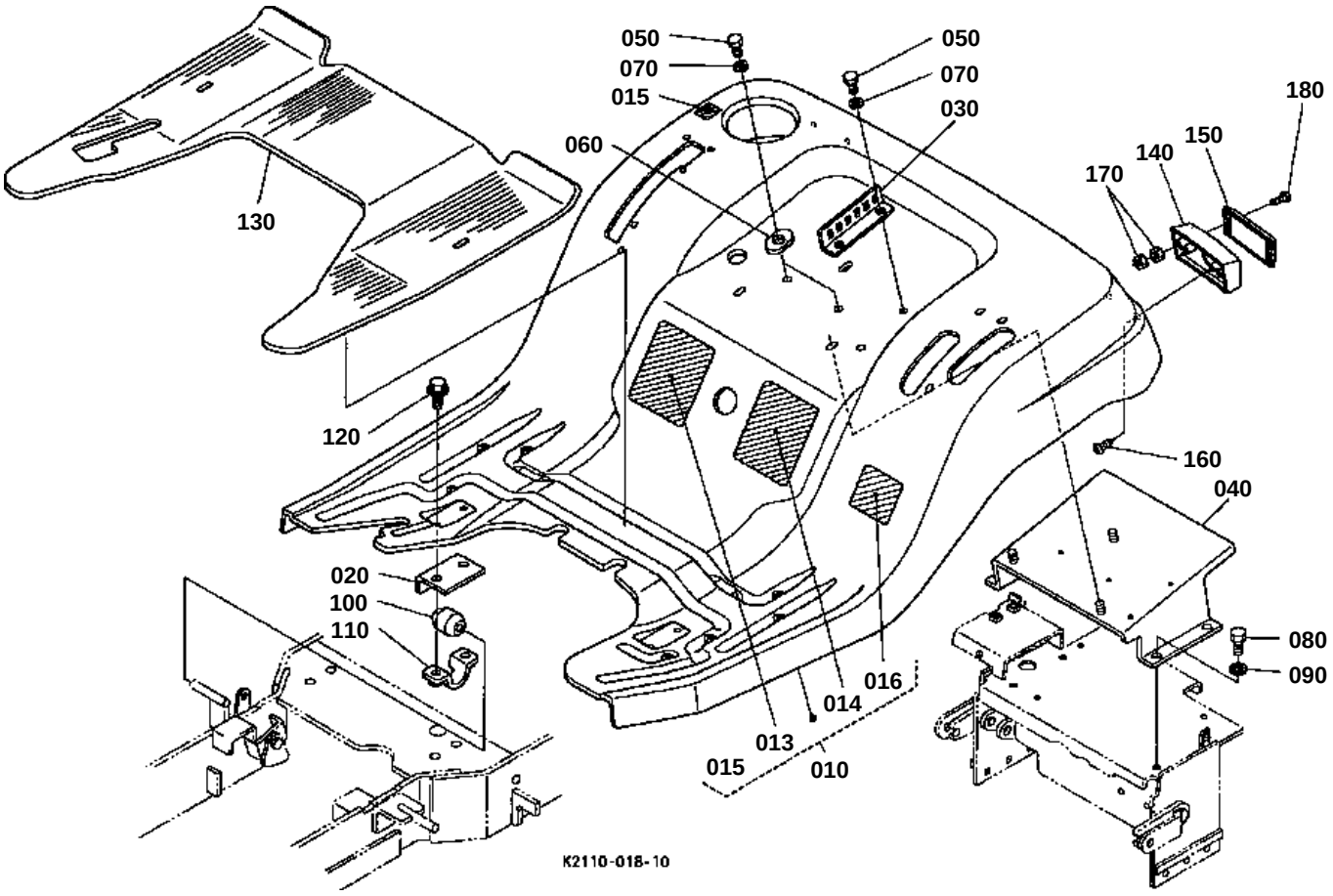
050
070
015
050
070
030
180
150
140
170
060
130
120
160
040
020
100
110
080
090
016
014
013
015
010
K2110-018-10

FENDER

↔ Interchangeable; ≠ not interchangeable; ← new for old; → old for new

REF.No	Part No.	Description	Q'ty	S.No.	I/C	REMARKS	Weight (kgf)	Weight (lb)
010	K2120-95020	KIT FENDER	1				13.5	29.7
013	K1211-65810	LABEL WARNING	1			NOT SALE ORDER BY Fig.No.G100-430	0	0
014	K1211-65820	LABEL CAUTION	1			NOT SALE ORDER BY Fig.No.G100-430	0	0
015	K2110-65850	LABEL FUEL	1			NOT SALE ORDER BY Fig.No.G100-430	0	0
016	K1122-65842	LABEL DANGER	1				0	0
020	K1310-55140	BRACKET FENDER	2				0.113	0.2486
030	K1310-55130	BRACKET SEAT	1				0.2	0.44
040	K1310-55120	SUPPORT FENDER	1				3.85	8.47
050	01053-50818	BOLT	4				0.011	0.0242
060	K1310-56170	WASHER GUIDE	2				0.02	0.044
070	75599-33012	WASHER SPRING	4				0.002	0.0044
080	01053-51020	BOLT	4				0.02	0.044
090	04512-60100	WASHER SPRING	4				0.002	0.0044
100	K1122-55120	BUSHING	2				0.04	0.088
110	K1211-55130	SUPPORT STEP	2				0.06	0.132
120	01754-50820	BOLT FLANGE	4				0.015	0.033
130	K1310-55210	SHEET STEP	1				0.85	1.87
140	K2561-55110	BASE TAIL LAMP	2				0.053	0.1166
150	K2563-62710	REFLECTOR	2				0.021	0.0462
160	K1122-55280	SCREW TAPPING	4				0.002	0.0044
170	02054-50040	NUT	8				0.001	0.0022
180	03054-50420	SCREW PAN-HEAD	4				0.002	0.0044

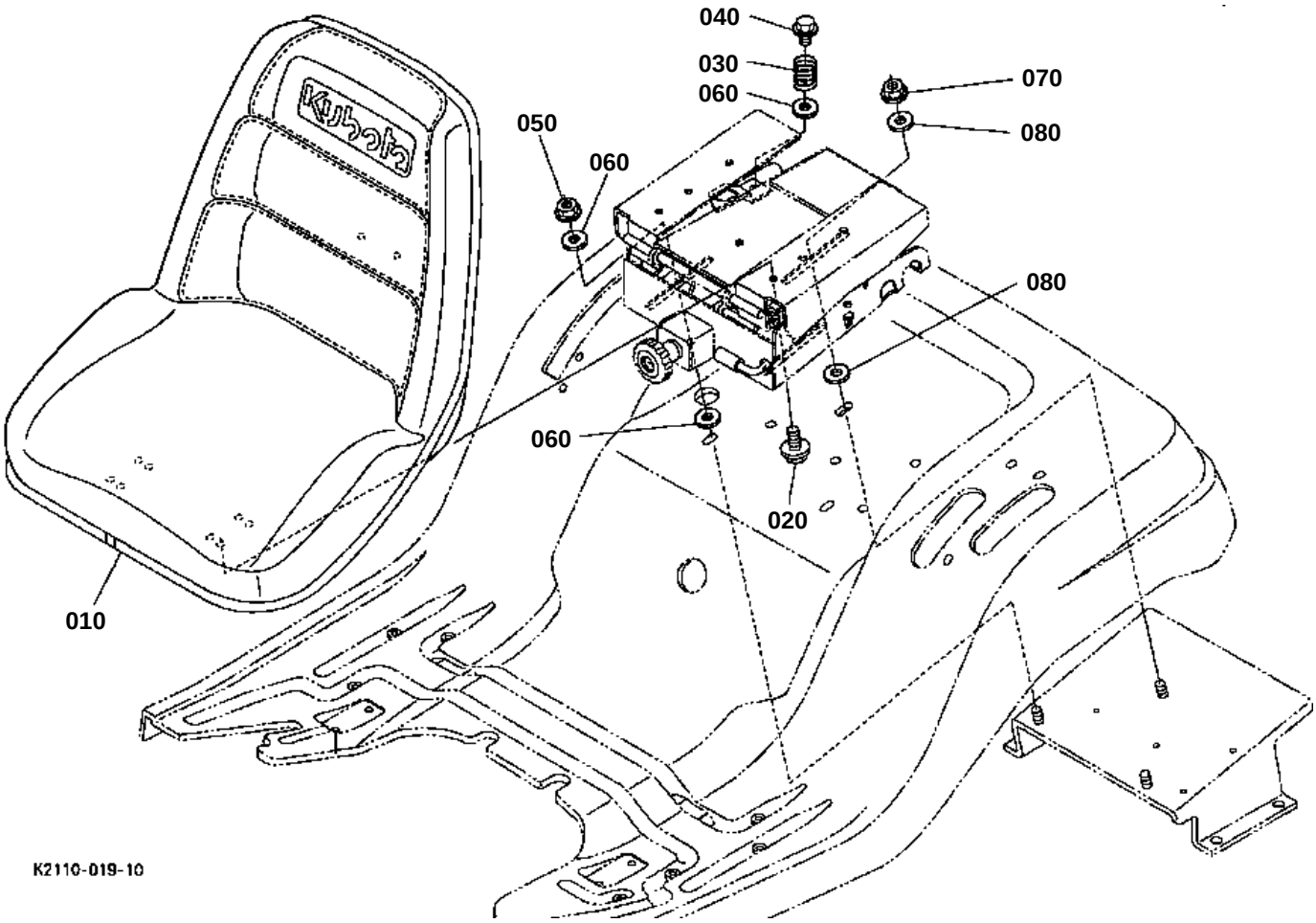
040
030
060
070
080
050
060
080
060
020
010
K2110-019-10

SEAT

↔ Interchangeable; ≠ not interchangeable; ← new for old; → old for new

REF.No	Part No.	Description	Q'ty	S.No.	I/C	REMARKS	Weight (kgf)	Weight (lb)
010	6C070-88720	SEAT	1				8.4	18.48
020	01754-50820	BOLT FLANGE	4				0.015	0.033
030	K1122-56140	SPRING SEAT SW.	1				0.02	0.044
040	01754-50814	BOLT FLANGE	1				0.005	0.011
050	K5112-72840	NUT LOCK	2				0.005	0.011
060	75599-32112	WASHER PLAIN	5				0.001	0.0022
070	75599-31923	NUT LOCKING	1				0.007	0.0154
080	75599-32113	WASHER PLAIN	2				0.01	0.022

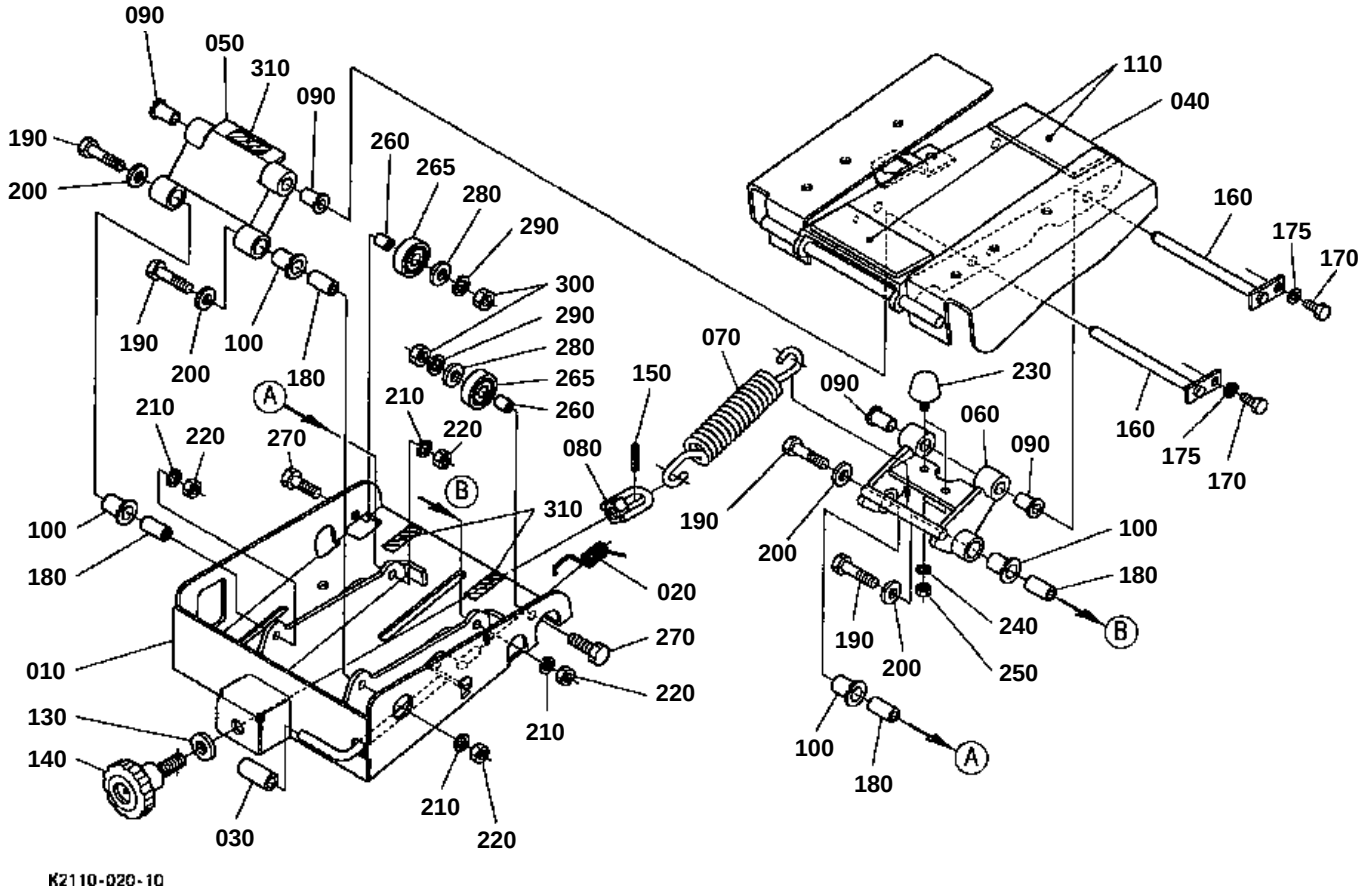
090
050
310
090
190
200
260
265
280
290
300
290
280
265
260
190
200
100
180
210
220
270
210
220
A
B
100
180
010
130
140
030
210
220
310
150
070
080
020
270
220
210
210
220
110
040
160
175
170
160
175
170
230
090
060
090
190
200
100
180
B
240
250
190
200
100
180
A

K2110-020-10

↔ Interchangeable; ≠ not interchangeable; ← new for old; → old for new

REF.No	Part No.	Description	Q'ty	S.No.	I/C	REMARKS	Weight (kgf)	Weight (lb)
010	K2110-56124	SUPPORT SEAT UNDER	1				3.82	8.404
020	K1211-56150	SPRING LOCK	1				0.012	0.0264
030	K1211-56140	COVER LEVER	1				0.008	0.0176
040	K2110-56220	SUPPORT SEAT UPPER	1				4.06	8.932
050	K2110-56233	LINK SEAT	1				0.44	0.968
060	K2110-56243	LINK SEAT	1				0.534	1.1748
070	K2110-56250	SPRING SUSPENSION	1				0.3	0.66
080	K2110-56260	NUT ADJUST MENT	1				0.04	0.088
090	K2110-56270	BUSH SUSPENSION	4				0.01	0.022
100	K3111-56220	BUSH	4				0.01	0.022
110	K2110-56322	RUBBER SEAT	2				0.031	0.0682
120	99999-99999	BLANK	0				0	0
130	75599-32114	WASHER PLAIN	1				0.011	0.0242
140	K2110-56290	BOLT KNOB	1				0.11	0.242
150	75599-52211	PIN SPRING	1				0.001	0.0022
160	K2110-56310	PIN SEAT	2				0.1	0.22
170	01053-50616	BOLT	2				0.005	0.011
175	75599-33011	WASHER SPRING	2				0.002	0.0044
180	K2110-56350	COLLAR SEAT	4				0.015	0.033
190	01053-50840	BOLT	4				0.018	0.0396
200	75599-32112	WASHER PLAIN	3				0.001	0.0022
210	75599-33012	WASHER SPRING	4				0.002	0.0044
220	02054-50080	NUT	4				0.005	0.011
230	K2110-56280	CUSHION	2				0.015	0.033
240	75599-33011	WASHER SPRING	2				0.002	0.0044
250	02014-50060	NUT	2				0.002	0.0044
260	K2110-56360	COLLAR SLIDE	2				0.015	0.033
265	K2110-56370	ROLLER SLIDE	2				0.01	0.022
270	01073-51030	BOLT	2				0.028	0.0616
280	75599-32113	WASHER PLAIN	2				0.01	0.022
290	04512-50100	WASHER SPRING	2				0	0
300	02018-50100	NUT	2				0.011	0.0242
310	K1122-57160	CUSHION RUBBER	3				0.001	0.0022

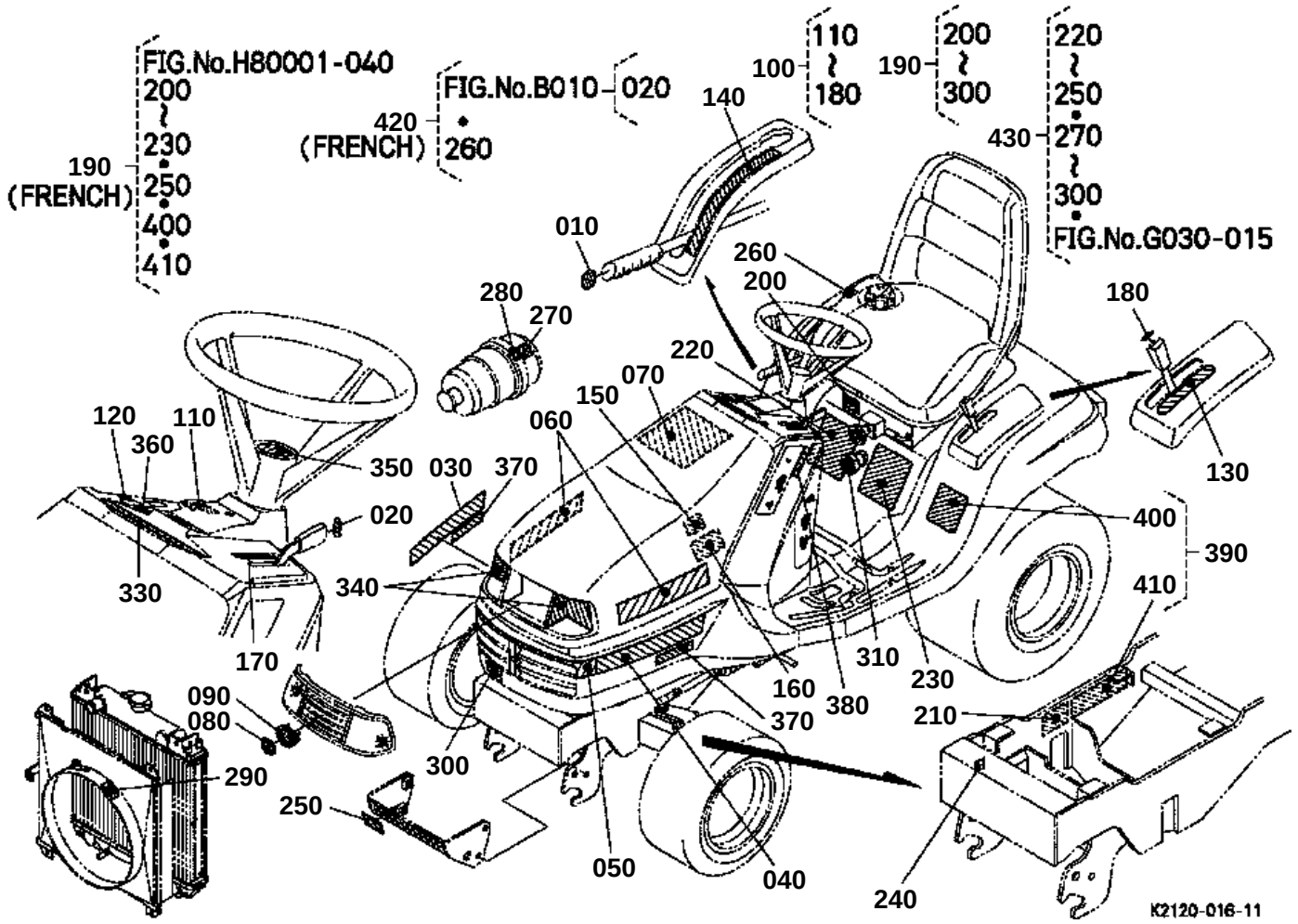
FIG.No.H80001-040
200
~
230
•
250
•
400
•
410
190
(FRENCH)
FIG.No.B010
020
420
•
(FRENCH)
260
100
110
~
180
190
200
~
300
140
430
220
~
250
•
270
~
300
•
FIG.No.G030-015
010
260
200
280
270
180
220
070
150
060
120
110
360
350
030
370
130
020
400
390
330
340
410
170
310
230
160
380
370
090
080
210
300
290
250
050
040
240
K2120-016-11

↔ Interchangeable; ≠ not interchangeable; ← new for old; → old for new

REF.No	Part No.	Description	Q'ty	S.No.	I/C	REMARKS	Weight (kgf)	Weight (lb)
010	K1122-65230	MARK GRIP PTO	1				0.001	0.0022
020	K1122-65240	MARK GRIP ACCEL	1				0.001	0.0022
030	K2120-65120	LABEL BONNET RH	1				0.02	0.044
040	K2120-65130	LABEL BONNET LH	1				0.015	0.033
050	K2110-65140	LABEL BONNET CT	1				0.03	0.066
055	K1122-65250	LABEL KUBOTA BONNET	1				0.005	0.011
060	66101-47212	MARK KUBOTA	2				0.02	0.044
070	K1310-65510	LABEL MAINTENANCE	1			ENGLISH	0.05	0.11
070	K1310-65520	LABEL MAINTENANCE(F)	1			FRENCH	0.05	0.11
080	T1060-49500	MARK SYMBOL	1				0.01	0.022
090	K1310-54260	BASE MARK	1				0.016	0.0352
100	K2120-65160	LABEL SET CONTROL	1				0.012	0.0264
110	K2120-65710	LABEL SWITCH	1			NOT SALE	0	0
120	K2110-65720	LABEL LIGHT	1			NOT SALE	0	0
130	K2110-65910	LABEL LIFT UP	1			NOT SALE	0	0
140	K2110-65920	LABEL PTO	1			NOT SALE	0	0
150	K2110-65960	LABEL PARKING	1			NOT SALE	0	0
160	K2110-65970	LABEL BRAKE	1			NOT SALE	0	0
170	K2110-95980	LABEL ACCEL	1			NOT SALE	0	0
180	K2110-65990	LABEL LIFT UP	1			NOT SALE	0	0
190	K2120-65170	LABEL SET CAUTION	1			ENGLISH	0.05	0.11
190	K2117-65170	LABEL SET	1			FRENCH	0.09	0.198
200	K2110-65930	LABEL SEAT AD	1			ENGLISH NOT SALE	0	0
200	K2117-65930	LABEL SEAT AD	1			FRENCH NOT SALE	0	0
210	K2110-65750	LABEL PTO TENSION	1			ENGLISH NOT SALE	0	0
210	K2117-65750	LABEL PTO TENSION	1			FRENCH NOT SALE	0	0
220	K1211-65810	LABEL WARNING	1			ENGLISH NOT SALE	0	0
220	K1217-65810	LABEL WARNING 1	1			FRENCH NOT SALE	0	0
230	K1211-65820	LABEL CAUTION	1			ENGLISH NOT SALE	0	0
230	K1217-65820	LABEL CAUTION 1	1			FRENCH NOT SALE	0	0
240	K2110-65730	LABEL HOT	1			NOT SALE	0	0
250	K2110-65740	LABEL MOW CAUTION	1			ENGLISH NOT SALE	0	0
250	K2117-65740	LABEL PTO WARNING	1			FRENCH NOT SALE	0	0
260	K2120-65850	LABEL FUEL	1			ENGLISH NOT SALE	0	0
260	K1217-65950	LABEL FUEL B	1			FRENCH NOT SALE	0	0
270	K2110-65940	LABEL CLEANER TOP	1			NOT SALE	0	0
280	K2110-65950	LABEL CLEANER ARROW	1			NOT SALE	0	0
290	K2561-65430	LABEL FAN CAUTION	1			NOT SALE	0	0
300	K2561-65420	LABEL HOT CAUTION	1			NOT SALE	0	0
310	K1132-65260	LABEL DIAL	1				0.001	0.0022
320	99999-99999	BLANK	0				0	0
330	K2120-65210	LABEL INDICATOR	1				0.01	0.022
340	K1211-65410	LABEL HEAD LAMP	1				0.04	0.088
350	K1122-65220	MARK STEERING	1				0.01	0.022
360	K2110-65462	LABEL NMR	1				0.001	0.0022
370	K2561-65140	LABEL POWER STEERING	2				0.001	0.0022
380	K2110-65192	LABEL KRS	1				0.001	0.0022
390	K1122-65190	LABEL SET CAUTION	1				0.034	0.0748
400	K1122-65842	LABEL DANGER	1				0	0
410	K1122-65830	LABEL WARNING	1				0	0
420	K2117-65190	LABEL SET	1			FRENCH	0.03	0.066
430	K2120-65170	LABEL SET CAUTION	1				0.05	0.11

ACCESSORIES AND SERVICE PARTS
ACCESSOIRES ET PIECES DE SERVICE
SONTIGES ZUBEHOER UND SERVICE-TEILE

TITLE-001-10

↔ Interchangeable; ≠ not interchangeable; ← new for old; → old for new

REF.No	Part No.	Description	Q'ty	S.No.	I/C	REMARKS	Weight (kgf)	Weight (lb)
010	K2110-71210	MANUAL OWNER	1				0.17	0.374
020	K2110-71510	MANUAL ASSEMBLY	1			NOT SALE	0.034	0.0748
030	K1122-71812	MANUAL	1			NOT SALE	0	0
040	12581-86200	WRENCH SPARK PLUG	1				0.13	0.286