Instructions for Parts Books

The heading at the top of the page will be the same for the picture of the parts at it is for the page with the part numbers.

Definition of column headings on part number pages:

REF.No → The number refering to the part on the picture page of the parts book.

Part No. → The number assigned to this part at the time of printing the parts book.

Description → Discription of part.

Q'ty → Quanity of part used on that page.

S.No. → Serial number range of the equipment that this part will fit.
>= Your serial number should be greater than or equal to the number shown.
<= Your serial number should be lesser than or equal to the serial number shown.

I/C → Interchangeability of part shown.
←→ The part shown will work for the older and later serial number.
The part shown is not interchangable with the other serial number.
← new for old
→ old for new

Remarks → Notes about this particulart part. Sometimes this may say except [FR] or [CA]

Note about Country Codes:

The parts books we use in the United States of America may also contain information about a part that would be different in another country. It is important that you are aware of the country codes in some instances.

Symbol	Country
A	United States of America
CA	Canada
FR	France
GR	Greece
PO	Portugal
AU	Australia

If the remarks column says for example EXCEPT [FR] this part works in all countries except France.
That means it will work here in the USA.

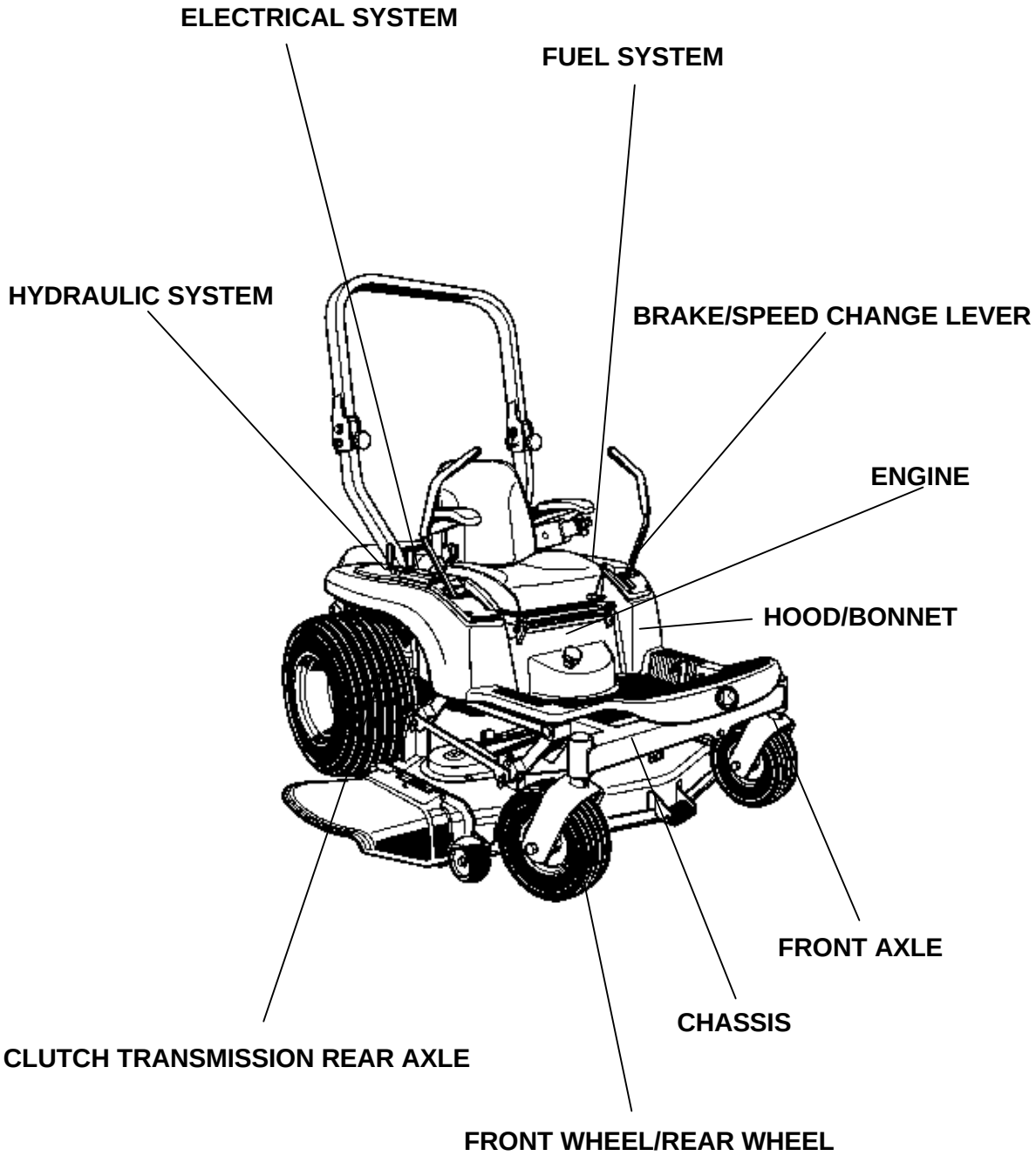

LABELS

ACCESSORIES

Item	Part No.	Description	Book
ENGINE	010001	CRANK CASE	100A0236
	010002	OIL PAN	100A0236
	010003	CYLINDER HEAD	100A0236
	010102	CRANKSHAFT	100A0236
	010103	FLYWHEEL	100A0236
	010201	FUEL FILTER	100A0236
	010202	CARBURETTOR	100A0236
	010205	SPEED CONTROL PLATE	100A0236
	010404	STARTER	100A0236
	010507	BLOWER HOUSING & BUFFLES	100A0236
	010603	AIR CLEANER	100A0236
	020605	MUFFLER	100A0236
	010606	EXHAUST SYSTEM	100A0236
	010608	UNIVERSAL JOINT	100A0236
	010809	LABEL	100A0236
	02A010	ACCELERATOR LEVER	100A0236
FUEL SYSTEM	02A101	FUEL TANK	100A0236
	02A110	FUEL PIPE	100A0236
ELECTRICAL SYSTEM	02A535	BATTERY	100A0236
	02B101	SWITCH	100A0236
	02B105	SWITCH/SENSOR	100A0236
	02B115	PANEL BOARD	100A0236
	02B230	ELECTRICAL WIRING	100A0236
CLUTCH TRANSMISSION REAR AXLE	02C420	TRANSMISSION CASE	100A0236
	02C422	CHARGE PUMP CASE	100A0236
	02C423	CENTER COVER 2	100A0236
	02C440	HST	100A0236
	02C452	HST RH 1 [COMPONENT PARTS]	100A0236
	02C453	HST RH 2 [COMPONENT PARTS]	100A0236
	02C454	HST RH 3 [COMPONENT PARTS]	100A0236
	02C455	HST LH [COMPONENT PARTS]	100A0236
	02C456	HST LH 1 [COMPONENT PARTS]	100A0236
	02C457	HST LH 1 [COMPONENT PARTS]	100A0236
	02C458	HST LH 2 [COMPONENT PARTS]	100A0236
	02C459	HST LH 4 [COMPONENT PARTS]	100A0236
	02D001	CLUTCH SHAFT	100A0236
	02D110	INPUT SHAFT	100A0236
BRAKE/SPEED CHANGE LEVER	02E005	BRAKE ROD	100A0236
	02E010	PARKING BRAKE LEVER	100A0236
	02F130	PTO GEAR SHIFT LEVER	100A0236
	02F141	SPEED CONTROL LEVER RH	100A0236
	02F142	SPEED CONTROL LEVER LH	100A0236
	02F147	SPEED CONTROL ROD 2	100A0236
FRONT AXLE	02G110	FRONT AXLE	100A0236
HYDRAULIC SYSTEM	02J230	PTO HYDRAULIC OIL LINE	100A0236
	02J240	HYDRAULIC PIPE (HST)	100A0236
	02K105	LIFT CYLINDER	100A0236
	02L103	MOWER LIFT ARM	100A0236
CHASSIS	02M005	MAIN FRAME	100A0236
	02M015	ENGINE SUPPORT	100A0236
	02M020	ADJUSTER HANDLE	100A0236
	02M025	LIFT UP ADJUSTER	100A0236
HOOD/BONNET	02M103	FRONT MASK	100A0236
	02M105	HOOD (BONNET)	100A0236
	02M210	FENDER	100A0236
	02M220	SEAT	100A0236
	02M224	SEAT BASE	100A0236
	02M225	STEP	100A0236
	02M301	ROPS	100A0236

Item	Part No.	Description	Book
FRONT WHEEL/REAR WHEEL	02N101	FRONT WHEEL	100A0236
	02N110	REAR WHEEL	100A0236
LABELS	02P102	LABEL(FRONT)	100A0236
	02P103	LABEL(REAR)	100A0236
ACCESSORIES	02R101	ACCESSORIES	100A0236

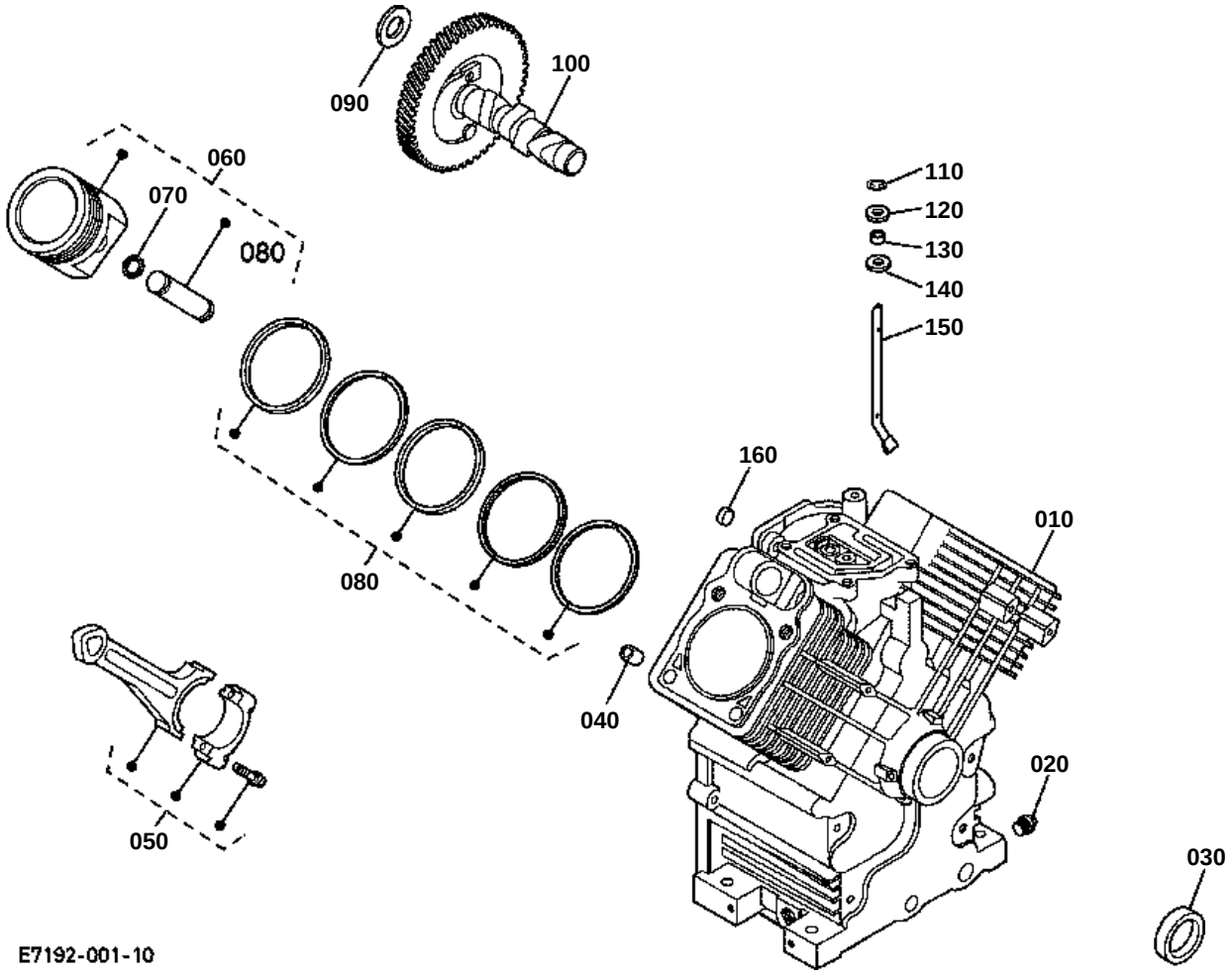
090
100
060
070
080
110
120
130
140
150
160
010
080
040
020
050
030
E7192-001-10

CRANK CASE

↔ Interchangeable; ≠ not interchangeable; ← new for old; → old for new

REF.No	Part No.	Description	Q'ty	S.No.	I/C	REMARKS	Weight (kgf)	Weight (lb)
010	E7192-95030	CRANKCASE(MINIBLOCK)	1				13.8	30.36
020	E7192-96010	PLUG	2				0.033	0.0726
030	E7192-96260	OIL SEAL FRONT	1				0.013	0.0286
040	E7194-94540	PIN LOCATING	6				0.004	0.0088
050	E7192-22010	ROD CONNECTING	2			STD	0.24	0.528
050	E7192-22060	ROD CONNECTING	2			+0.25mm	0.24	0.528
060	E7192-21840	SET RING PISTON(STD)	2			STD	0.36	0.792
060	E7192-21870	SET RING PISTON	2			+0.08mm	0.37	0.814
060	E7192-21850	SET RING PISTON	2			+0.25mm	0.37	0.814
060	E7192-21860	SET RING PISTON	2			+0.50mm	0.38	0.836
070	E7192-21330	RETAINER PISTON PIN	4				0.002	0.0044
080	E7192-21050	RING SET(STD)	2			STD	0.041	0.0902
080	E7192-21890	RING SET	2			+0.25mm	0.04	0.088
080	E7192-21880	RING SET	2			+0.50mm	0.045	0.099
090	E7194-16620	SHIM CAMSHAFT RED	1				0.009	0.0198
090	E7194-16660	SHIM CAMSHAFT BLACK	1				0.01	0.022
090	E7194-16670	SHIM CAMSHAFT WHITE	1				0.008	0.0176
090	E7194-16610	SHIM CAMSHAFT BLUE	1				0.008	0.0176
090	E7194-16630	SHIM CAMSHAFT YELLOW	1				0.01	0.022
090	E7194-16640	SHIM CAMSHAFT GREEN	1				0.01	0.022
090	E7194-16650	SHIM CAMSHAFT GRAY	1				0.01	0.022
100	E7192-16150	CAMSHAFT	1				1.64	3.608
110	E7192-19110	RETAINER RING	1				0.001	0.0022
120	E7192-56190	WASHER PLAIN	1				0.001	0.0022
130	E7192-56180	SEAL GOVERNOR SHAFT	1				0.001	0.0022
140	E7192-56160	WASHER PLAIN	1				0.001	0.0022
150	E7192-56170	SHAFT GOVERNOR CROSS	1				0.06	0.132
160	E7194-96270	PLUG CUP	1				0.002	0.0044

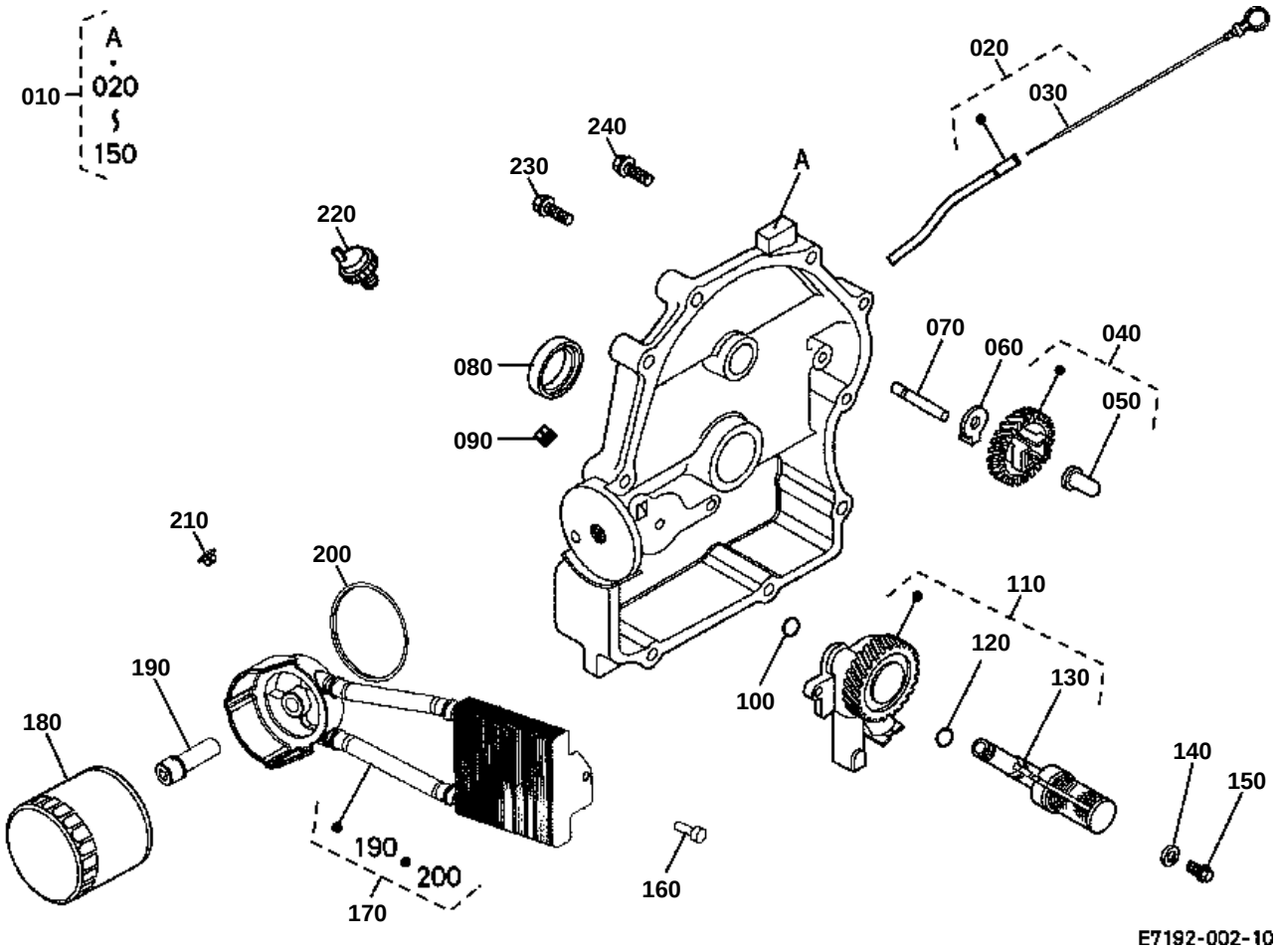
A
020
150
010
020
030
240
230
A
220
070
060
040
080
050
090
210
200
110
120
190
130
100
180
140
150
190
200
170
160
E7192-002-10

OIL PAN

↔ Interchangeable; ≠ not interchangeable; ← new for old; → old for new

REF.No	Part No.	Description	Q'ty	S.No.	I/C	REMARKS	Weight (kgf)	Weight (lb)
010	E7192-01050	ASSY OIL PAN	1				4	8.8
020	E7192-55110	KIT TUBE & DIPSTICK	1				0.11	0.242
030	E7192-36410	DIPSTICK	1				0.02	0.044
040	E7192-55290	KIT GOVERNOR GEAR	1				0.04	0.088
050	E7194-55450	PIN GOVERNOR	1				0.006	0.0132
060	E7192-55330	WASHER	1				0.004	0.0088
070	E7194-55310	SHAFT GOVERNOR GEAR	1				0.014	0.0308
080	E7192-04140	SEAL OIL	1				0.022	0.0484
090	E7194-96030	PLUG	2				0.006	0.0132
100	E7192-36420	O RING	1				0.002	0.0044
110	E7192-35070	ASSY PUMP OIL	1				0.49	1.078
120	E7192-36820	O-RING OIL PICK-UP	1				0.001	0.0022
130	E7192-35060	PICK-UP OIL	1				0.04	0.088
140	E7194-55330	WASHER PLAIN	2				0.003	0.0066
150	E7194-36470	BOLT FLANGE	2				0.011	0.0242
160	E7192-91010	BOLT FLANGE	2				0.006	0.0132
170	E7192-35130	KIT COOLER OIL	1				0.79	1.738
180	E7194-32110	FILTER OIL	1				0.31	0.682
190	E7192-06150	NIPPLE OIL FILTER	1				0.04	0.088
200	E7192-35160	O RING	1				0.004	0.0088
210	E7192-32450	NUT PLASTIC	2				0.002	0.0044
220	E7192-39010	SWITCH OIL	1				0.03	0.066
230	E7194-91110	BOLT FLANGE	9				0.02	0.044
240	E7194-91120	BOLT FLANGE	1				0.023	0.0506

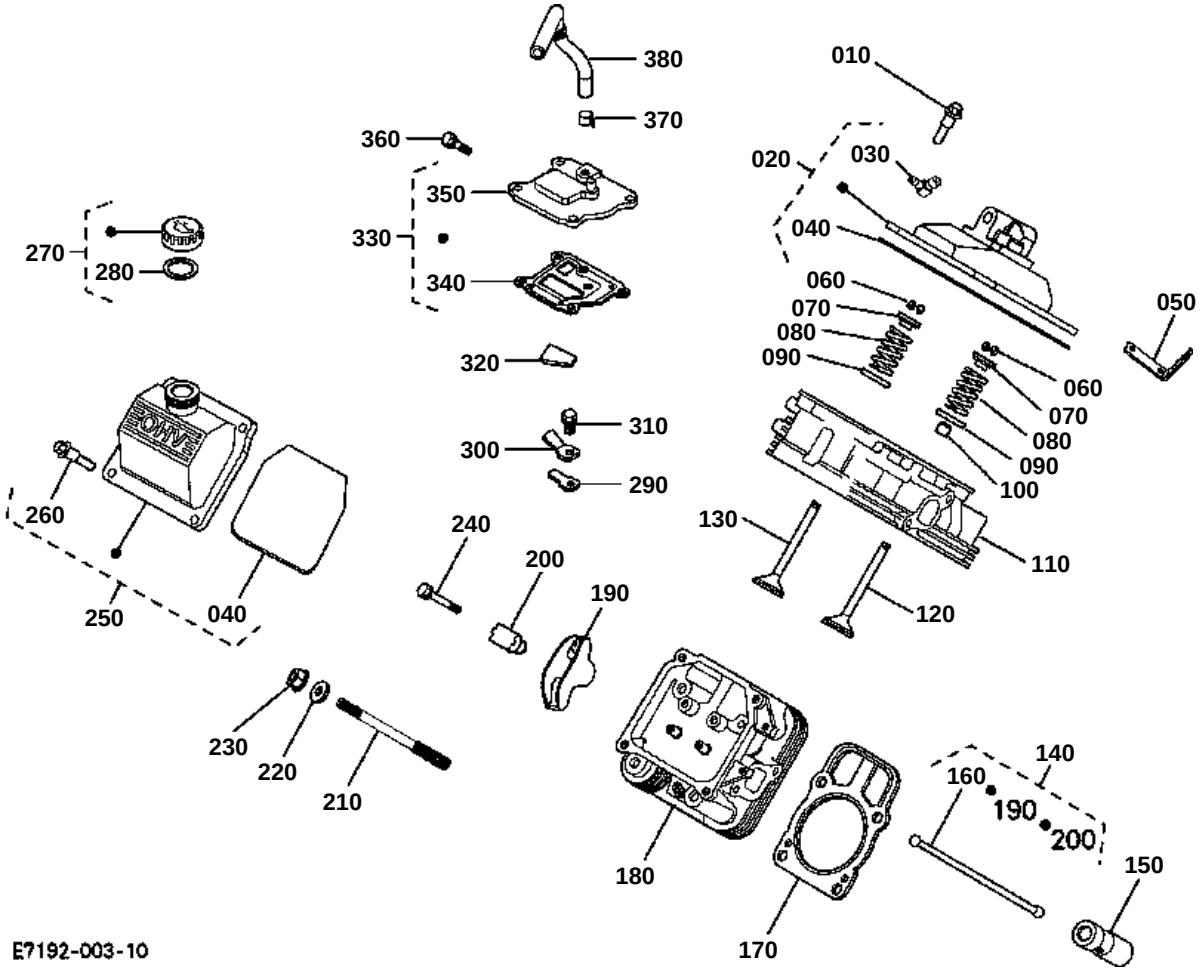
380
370
360
350
330
340
320
310
300
290
270
280
260
250
040
240
200
190
230
220
210
180
170
010
020
030
040
060
070
080
090
050
060
070
080
090
100
110
130
120
140
160
190
200
150
E7192-003-10

CYLINDER HEAD

↔ Interchangeable; ≠ not interchangeable; ← new for old; → old for new

REF.No	Part No.	Description	Q'ty	S.No.	I/C	REMARKS	Weight (kgf)	Weight (lb)
010	E7192-43070	SCREW SHOULDER	4				0.013	0.0286
020	E7192-43910	ASSY PUMP FUEL	1				0.52	1.144
030	E7194-43910	JOINT	2				0.016	0.0352
040	E7192-14500	O-RING VALVE COVER	1				0.005	0.011
050	E7192-01750	STRAP LIFTING	1				0.04	0.088
060	E7194-13360	KIT RETAINER	4				0.004	0.0088
070	E7194-13330	CAP VALVE SPRING	4				0.01	0.022
080	E7192-13240	SPRING VALVE	4				0.031	0.0682
090	E7192-13710	RETAINER SPRING	4				0.004	0.0088
100	E7192-13910	SEAL VALVE STEM	2				0.004	0.0088
110	E7192-31010	ASSY CYLINDER HEAD	1				1.71	3.762
120	E7192-13110	VALVE INTAKE	2			STD	0.05	0.11
120	E7192-13010	VALVE INTAKE	2			+0.25mm	0.06	0.132
130	E7192-13120	VALVE EXHAUST	2			STD	0.05	0.11
130	E7192-13020	VALVE EXHAUST	2			+0.25mm	0.05	0.11
140	E7192-13810	KIT VALVE	1				0.47	1.034
150	E7192-14350	PIVOT ROCKER ARM	4				0.017	0.0374
160	E7192-15110	ROD PUSH	4				0.025	0.055
170	E7192-03310	GASKET CYL.HEAD	2				0.4	0.88
180	E7192-03120	HEAD ASSEMBLY #2	1				1.7	3.74
190	E7194-14110	ARM ROCKER	4				0.074	0.1628
200	E7194-15550	LIFTER VALVE	4				0.098	0.2156
210	E7192-03450	STUD CYLINDER HEAD	8				0.041	0.0902
220	E7192-03540	WASHER PLAIN	8				0.008	0.0176
230	E7192-92010	NUT FLANGE	8				0.007	0.0154
240	E7194-14230	BOLT FLANGE	4				0.012	0.0264
250	E7192-94110	KIT VALVE COOLER	1				0.45	0.99
260	E7192-43060	SCREW SHOULDER	4				0.014	0.0308
270	E7192-36490	KIT OIL FILL CAP	1				0.018	0.0396
280	E7192-36480	O-RING VALVE COVER	1				0.002	0.0044
290	E7192-94210	REED BREATHER	1				0.001	0.0022
300	E7192-94250	RETAINER BREATHER	1				0.006	0.0132
310	E7194-05220	BOLT FLANGE	1				0.006	0.0132
320	E7192-94320	FILTER BREATHER	1				0.002	0.0044
330	E7192-94350	KIT BREATHER	1				0.12	0.264
340	E7192-94380	GASKET BREATHER	1				0.005	0.011
350	E7192-94390	COVER BREATHER	1				0.11	0.242
360	E7194-43060	BOLT FLANGE	4				0.01	0.022
370	E7192-94410	CLAMP HOSE	1				0.006	0.0132
380	E7192-94430	HOSE BREATHER	1				0.013	0.0286

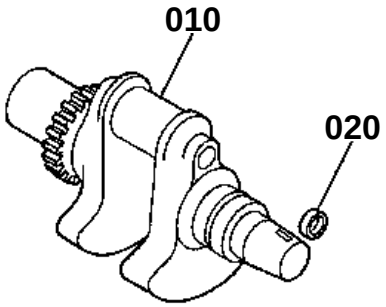

E7192-004-10

↔ Interchangeable; ≠ not interchangeable; ← new for old; → old for new

REF.No	Part No.	Description	Q'ty	S.No.	I/C	REMARKS	Weight (kgf)	Weight (lb)
010	E7192-23010	CRANKSHAFT	1				4.5	9.9
020	E7194-96270	PLUG CUP	1				0.002	0.0044

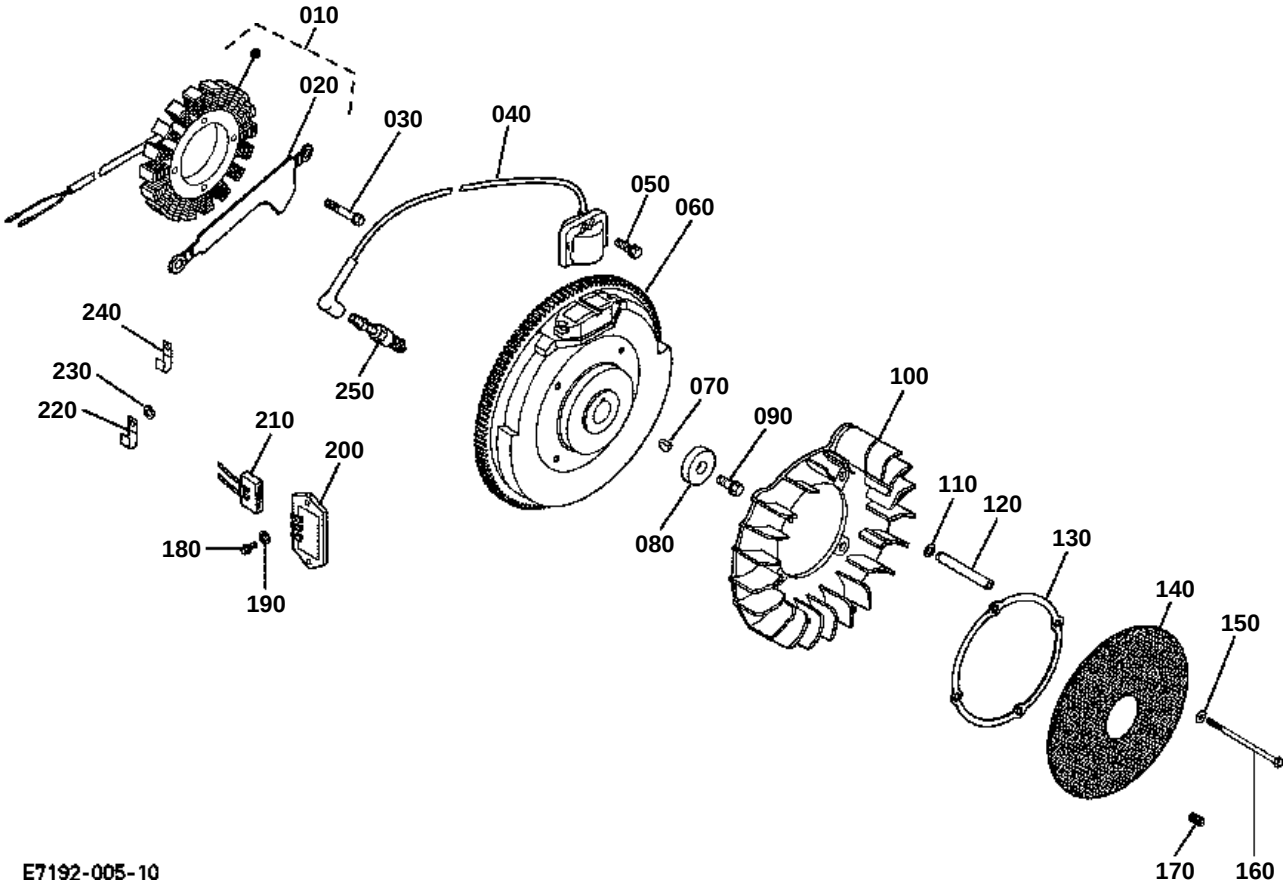
010
020
030
040
050
060
240
230
220
250
070
100
090
210
200
110
120
080
130
180
190
140
150
170
160
E7192-005-10

↔ Interchangeable; ≠ not interchangeable; ← new for old; → old for new

REF.No	Part No.	Description	Q'ty	S.No.	I/C	REMARKS	Weight (kgf)	Weight (lb)
010	E7192-67070	KIT STARTER	1				0.71	1.562
020	E7192-67110	BRACKET STATOR WIRE	1				0.03	0.066
030	E7194-91010	BOLT	2				0.006	0.0132
040	E7192-67060	COIL IGNITION	2				0.28	0.616
050	E7194-67020	BOLT FLANGE	4				0.008	0.0176
060	E7192-25110	FLYWHEEL	1				7.5	16.5
070	E7194-95250	KEY	1				0.006	0.0132
080	E7194-74450	WASHER PLAIN	1				0.042	0.0924
090	E7194-75350	BOLT FLANGE	1				0.03	0.066
100	E7192-74460	FAN	1				0.51	1.122
110	E7192-26210	WASHER PLAIN	4				0.001	0.0022
120	E7192-76120	SPACER	4				0.021	0.0462
130	E7192-76110	RING SUPPORT	1				0.033	0.0726
140	E7192-75370	NET SCREEN	1				0.11	0.242
150	E7192-76280	WASHER SPRING	4				0.001	0.0022
160	E7192-76250	SCREW HEX.CAP	4				0.025	0.055
170	E7192-76210	SCREW SET	1				0.001	0.0022
180	E7192-76320	SCREW PHILLIPS HD.	2				0.01	0.022
190	E7194-35180	WASHER PLAIN	2				0.003	0.0066
200	E7194-55230	RECTIFIER REGULATOR	1				0.094	0.2068
210	E7194-68010	CONNECTOR	1				0.006	0.0132
220	E7192-35220	CLIP CABLE	1				0.008	0.0176
230	E7192-76520	WASHER PLAIN	1				0.001	0.0022
240	E7192-67090	CLIP	1				0.006	0.0132
250	E7192-37742	SPARK PLUG	2				0	0
260	E7194-49110	WIRE HARNESS	1			NOT SHOWN IN FIG.	0.013	0.0286
270	E7194-44710	WASHER SPRING	1			NOT SHOWN IN FIG.	0.002	0.0044
280	E7192-68130	WIRE HARNESS	1			NOT SHOWN IN FIG.	0.06	0.132
290	E7192-68240	TIE CABLE	2			NOT SHOWN IN FIG.	0.002	0.0044

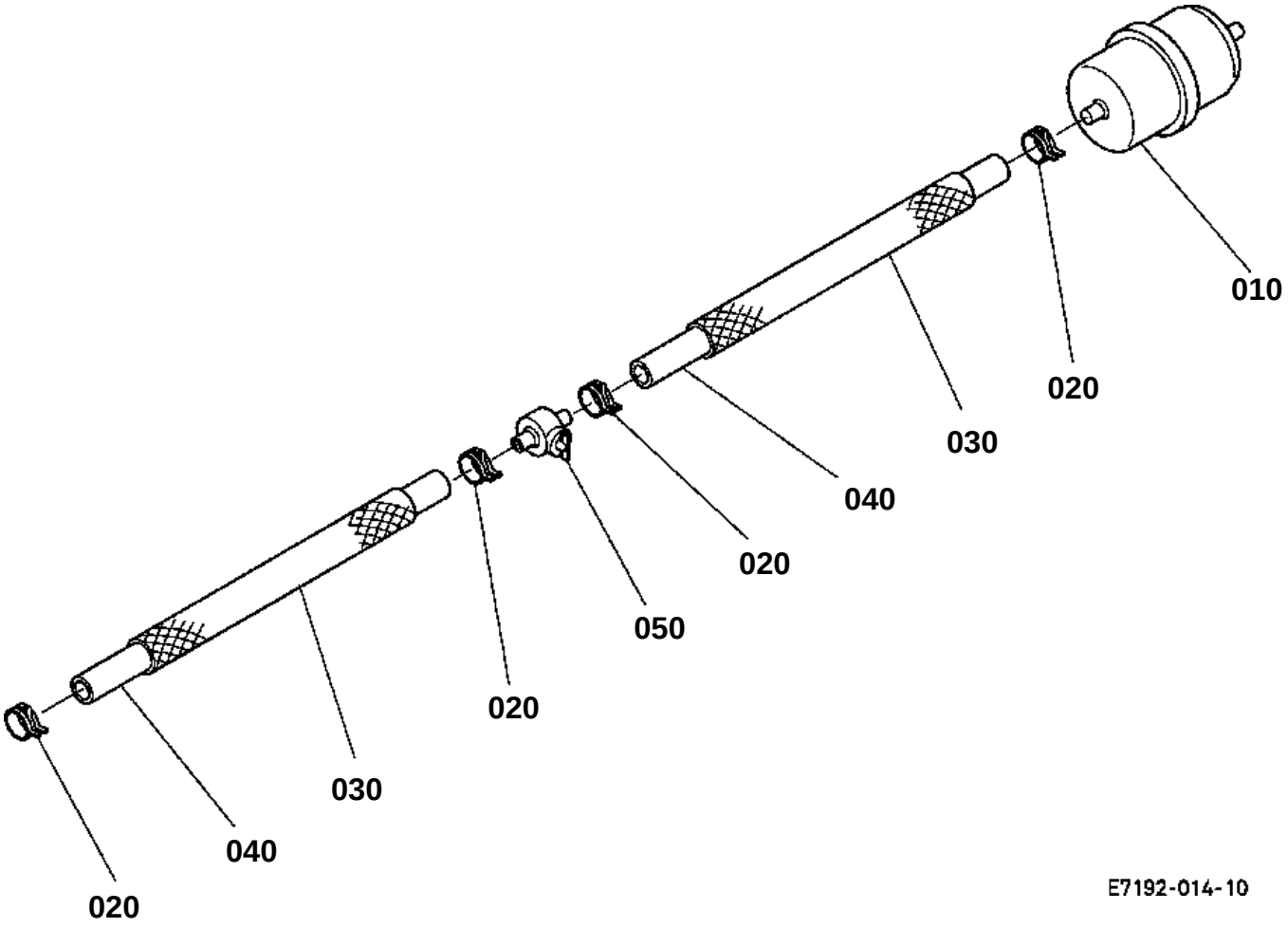
010
020
030
040
020
050
020
030
040
020
E7192-014-10

FUEL FILTER

↔ Interchangeable; ≠ not interchangeable; ← new for old; → old for new

REF.No	Part No.	Description	Q'ty	S.No.	I/C	REMARKS	Weight (kgf)	Weight (lb)
010	E7192-43120	FILTER FUEL	1				0.03	0.066
020	E7194-05520	CLAMP HOSE	4				0.008	0.0176
030	E7192-27040	SLEEVE	2				0.006	0.0132
040	E7192-42180	TUBE FUEL	2				0.02	0.044
050	K1142-24260	VALVE FUEL	1				0.01	0.022

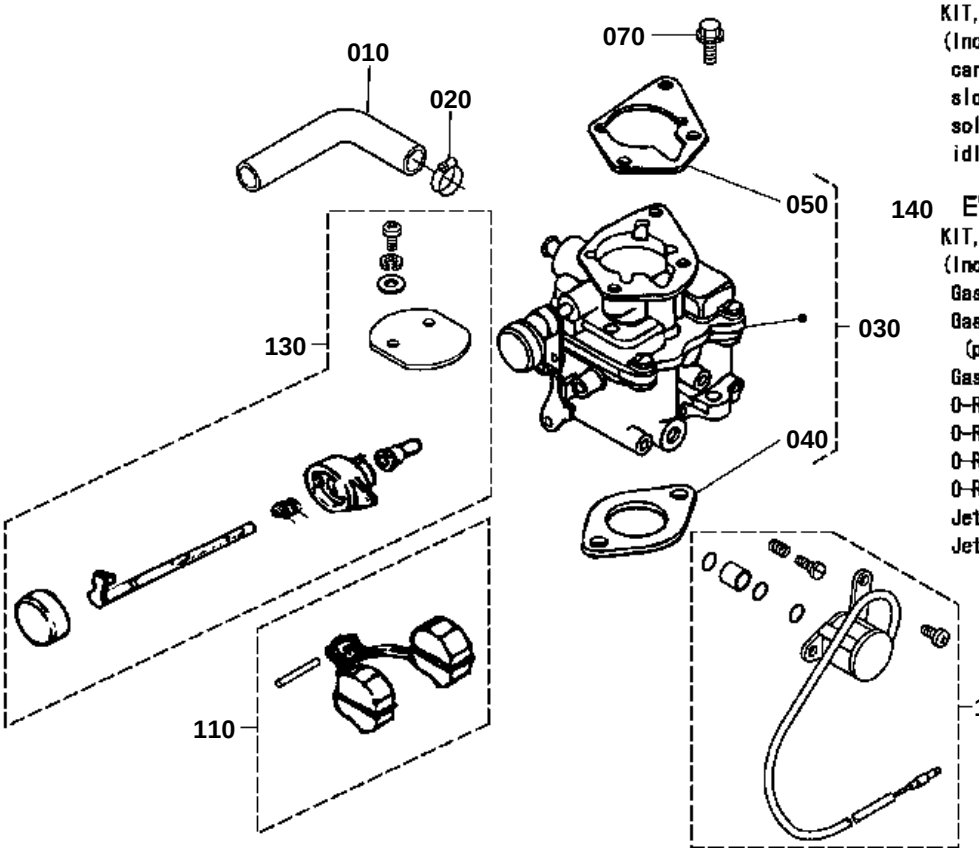

120 E7192-46160
KIT, CARBURETOR
(Includes carburetor gasket,
carburetor screw, idle needle spring,
slow jet o-ring, main jet o-ring,
solenoid o-ring, inlet needle clip
idle needle, inlet needle valve)

140 E7192-99310
KIT, HIGH ALTITUDE
(Includes・・・
Gasket, carburetor
Gasket, carburetor
(plastic intake manifold)
Gasket, air cleaner base
O-Ring, main jet screw 7.8mm dia.
O-Ring, solenoid 8.6mm dia.
O-Ring, solenoid seat 4.3mm dia.
O-Ring, solenoid seat 5.8mm dia.
Jet, main
Jet, slow)

CARBURETTOR

↔ Interchangeable; ≠ not interchangeable; ← new for old; → old for new

REF.No	Part No.	Description	Q'ty	S.No.	I/C	REMARKS	Weight (kgf)	Weight (lb)
010	E7192-27012	TUBE FUEL	1				0	0
020	E7194-05520	CLAMP HOSE	5				0.008	0.0176
030	E7192-44000	KIT CARBURETTOR	1				0.62	1.364
040	E7192-27030	GASKET CARBURETTOR	1				0.007	0.0154
050	E7192-11510	GASKET A/C BASE	1				0.003	0.0066
060	99999-99999	BLANK	0				0	0
070	E7192-27020	BOLT FLANGE	1				0.008	0.0176
080	99999-99999	BLANK	0				0	0
090	99999-99999	BLANK	0				0	0
100	E7192-83500	KIT SOLENOID	1				0.07	0.154
110	E7192-44720	KIT FLOAT	1				0.013	0.0286
120	E7192-46160	KIT CARBURETTOR	1			SEE ABOVE	0.012	0.0264
130	E7192-44550	KIT CHOKE	1				0.033	0.0726
140	E7192-99310	KIT HIGH ALTITUDE	1			SEE ABOVE	0.032	0.0704
150	E7192-95050	GASKET SET	1			NOT SHOWN IN FIG.	1.15	2.53

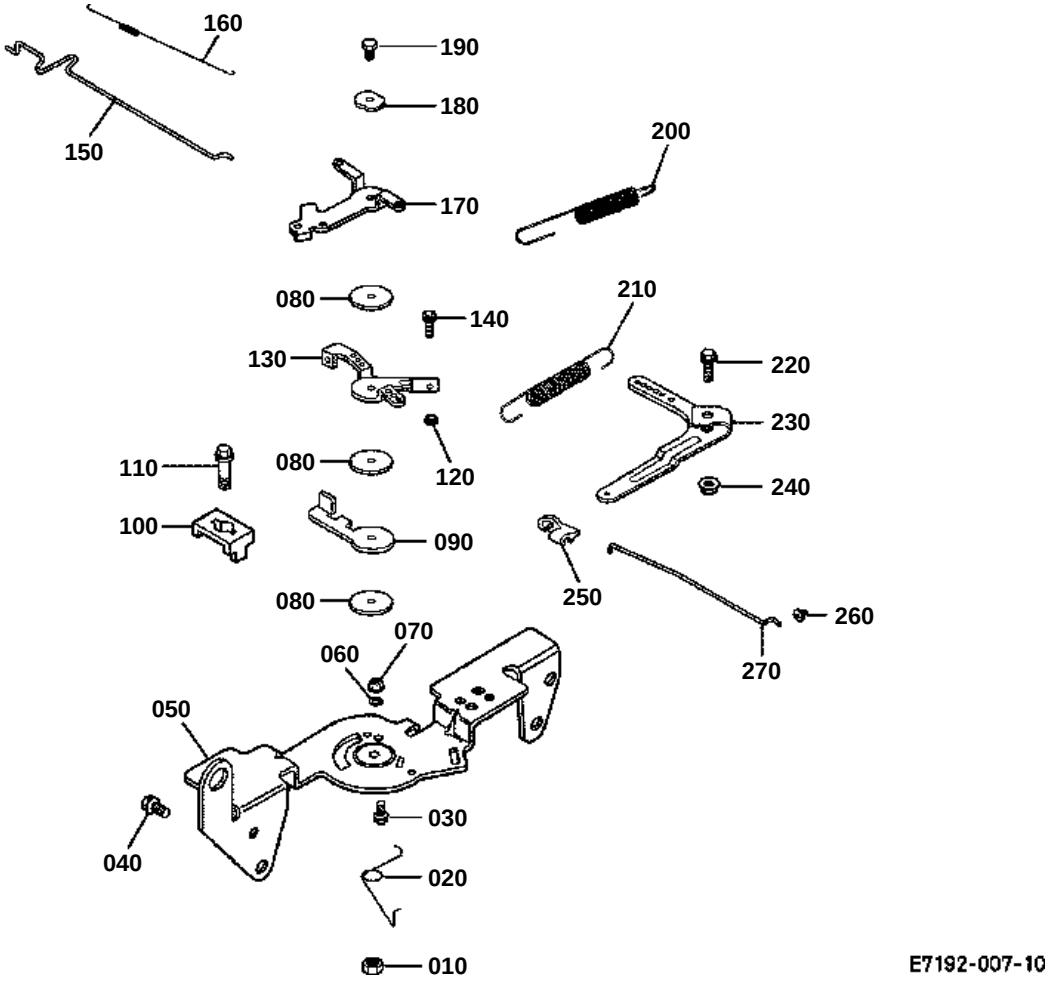
160
190
180
150
200
170
080
140
210
130
220
230
110
080
120
240
100
090
250
080
260
070
060
270
050
030
040
020
010
E7192-007-10

SPEED CONTROL PLATE

↔ Interchangeable; ≠ not interchangeable; ← new for old; → old for new

REF.No	Part No.	Description	Q'ty	S.No.	I/C	REMARKS	Weight (kgf)	Weight (lb)
010	E7192-29010	NUT HEX.LOCK	1				0.001	0.0022
020	E7192-29020	SPRING CHOKE RETURN	1				0.002	0.0044
030	E7194-67020	BOLT FLANGE	1				0.008	0.0176
040	E7194-91060	BOLT FLANGE	4				0.01	0.022
050	E7192-57180	BRACKET CONTROL	1				0.23	0.506
060	E7192-29030	WASHER LOCK	1				0.001	0.0022
070	E7192-29040	NUT FLANGE	1				0.002	0.0044
080	E7192-29050	WASHER PLAIN	3				0.001	0.0022
090	E7192-56370	LEVER THROTTLE ACTR.	1				0.018	0.0396
100	E7194-57320	CLAMP CABLE	1				0.006	0.0132
110	E7194-35170	BOLT FLANGE	3				0.006	0.0132
120	E7194-57390	NUT FLANGE	1				0.003	0.0066
130	E7192-56360	LEVER THROTTLE CTR.	1				0.025	0.055
140	E7194-57410	BOLT FLANGE	1				0.006	0.0132
150	E7192-57810	LINK CHOKE	1				0.01	0.022
160	E7192-54140	SPRING LINKAGE	1				0.001	0.0022
170	E7192-57820	LEVER CHOKE	1				0.025	0.055
180	E7192-29060	WASHER SPRING	1				0.001	0.0022
190	E7194-67020	BOLT FLANGE	1				0.008	0.0176
200	E7192-54130	SPRING THROTTLE LMT.	1				0.003	0.0066
210	E7192-56410	SPRING GOVERNOR	1				0.01	0.022
220	E7192-29070	BOLT SQ.NECK	1				0.006	0.0132
230	E7192-56110	LEVER GOVERNOR	1				0.064	0.1408
240	E7194-49140	NUT FLANGE	1				0.006	0.0132
250	E7194-56920	BUSHING LINKAGE	1				0.002	0.0044
260	E7194-56910	BUSHING LINKAGE	1				0.002	0.0044
270	E7192-56350	LINKAGE THROTTLE	1				0.005	0.011

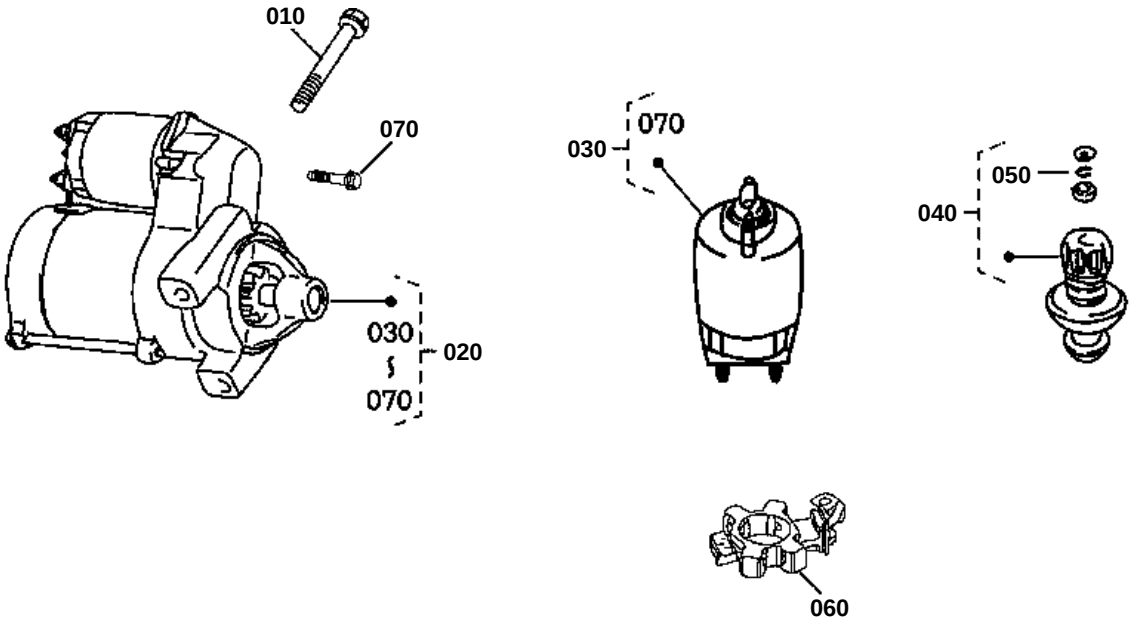
010
070
030
070
020
030
070
050
040
060
E7192-008-10

↔ Interchangeable; ≠ not interchangeable; ← new for old; → old for new

REF.No	Part No.	Description	Q'ty	S.No.	I/C	REMARKS	Weight (kgf)	Weight (lb)
010	E7194-63320	BOLT FLANGE	2				0.037	0.0814
020	E7194-63012	ASSY STARTER	1				3.8	8.36
030	E7194-63210	KIT SOLENOID	1				0.73	1.606
040	E7194-63040	KIT PINIONDDRIVE	1				0.316	0.6952
050	E7194-63120	RING	1				0.002	0.0044
060	E7194-63380	KIT BRUSH	1				0.09	0.198
070	E7194-63430	BOLT	3				0.003	0.0066

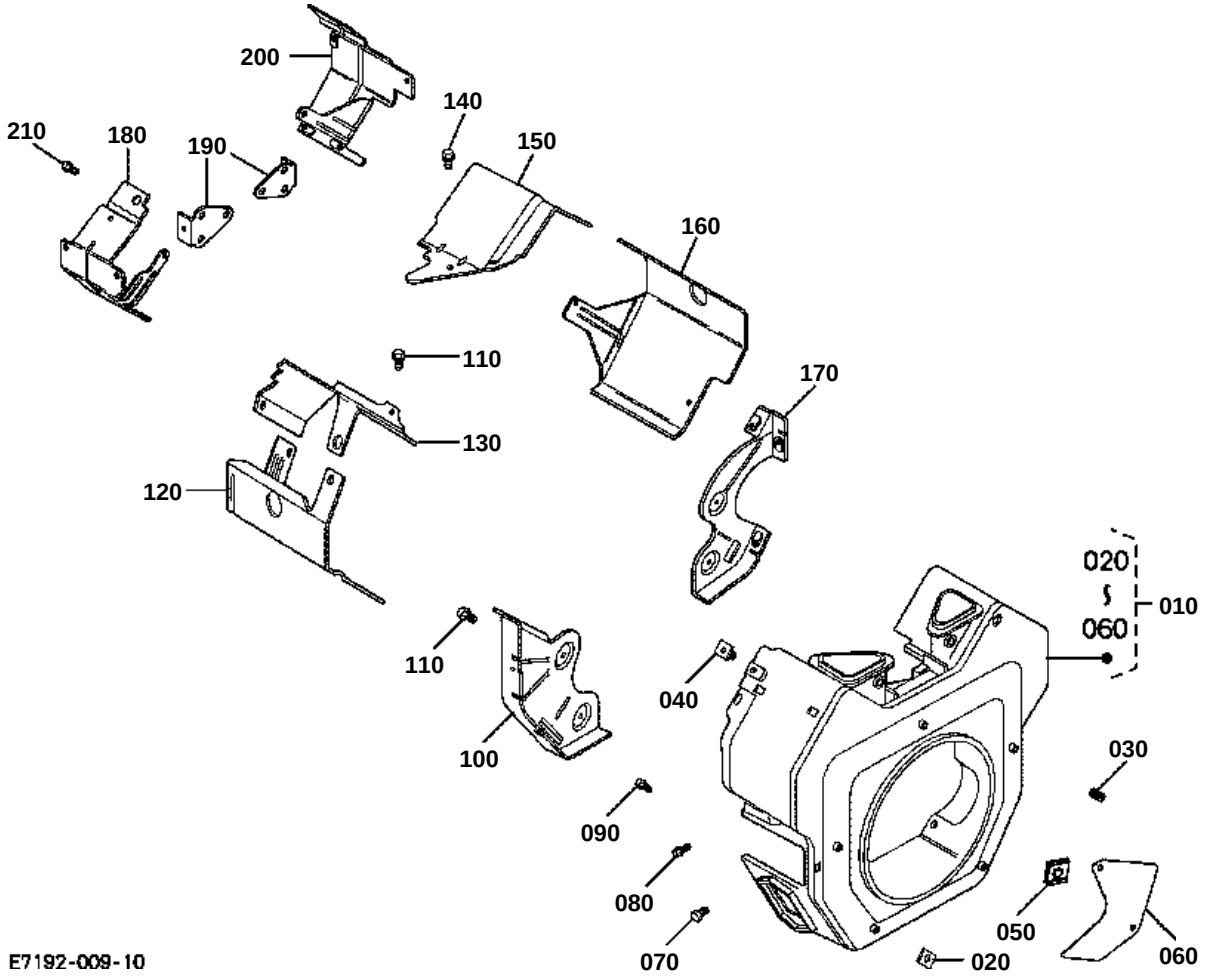
200
140
210
180
190
150
160
110
170
130
120
020
010
060
110
040
100
030
090
080
050
070
020
060
E7192-009-10

BLOWER HOUSING & BUFFLES

↔ Interchangeable; ≠ not interchangeable; ← new for old; → old for new

REF.No	Part No.	Description	Q'ty	S.No.	I/C	REMARKS	Weight (kgf)	Weight (lb)
010	E7192-85200	HOUSING BLOWER	1				1	2.2
020	E7192-85210	NUT PLASTIC	2				0.001	0.0022
030	E7192-76210	SCREW SET	1				0.001	0.0022
040	E7192-86210	NUT PLASTIC	3				0.003	0.0066
050	E7194-67580	CLIP MOUNTING	4				0.004	0.0088
060	E7192-86410	COVER PANEL	2				0.09	0.198
070	E7192-86450	BOLT FLANGE	1				0.005	0.011
080	E7194-35170	BOLT FLANGE	3				0.006	0.0132
090	E7194-67020	BOLT FLANGE	4				0.008	0.0176
100	E7192-74490	PLATE BACKING	1				0.15	0.33
110	E7194-91060	BOLT FLANGE	4				0.01	0.022
120	E7192-74480	BAFFLE CYLINDER BAR.	1				0.27	0.594
130	E7192-75500	BAFFLE VALLEY	1				0.13	0.286
140	E7194-05220	BOLT FLANGE	2				0.006	0.0132
150	E7192-75390	BAFFLE VALLEY	1				0.12	0.264
160	E7192-74470	BAFFLE CYLINDER BAR.	1				0.27	0.594
170	E7192-74500	PLATE BACKING	1				0.11	0.242
180	E7192-74510	BAFFLE DUCTED AIR RH	1				0.27	0.594
190	E7192-74530	BRACKET	2				0.034	0.0748
200	E7192-74520	BAFFLE DUCTED AIR LH	1				0.2	0.44
210	E7192-77210	BOLT FLANGE	4				0.007	0.0154

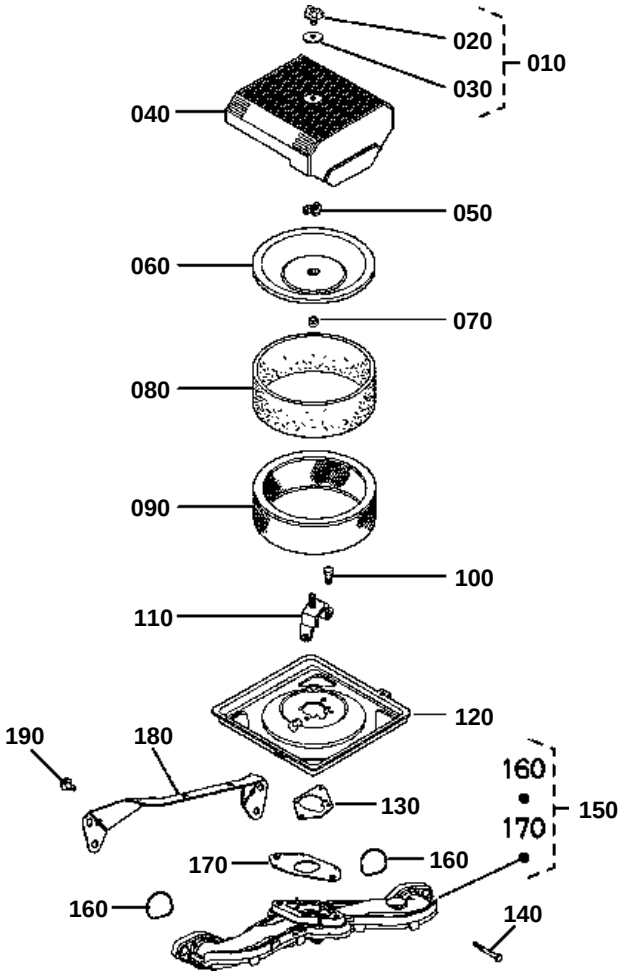
020
010
030
040
050
060
070
080
090
100
110
120
190
180
160
150
130
170
170
160
160
140
E7192-010-11

AIR CLEANER

↔ Interchangeable; ≠ not interchangeable; ← new for old; → old for new

REF.No	Part No.	Description	Q'ty	S.No.	I/C	REMARKS	Weight (kgf)	Weight (lb)
010	E7192-11160	KIT KNOB W/SEAL	1				0.025	0.055
020	E7194-92620	KNOB AIR CLEAN.COVER	1				0.021	0.0462
030	E7192-31020	O RING	1				0.004	0.0088
040	E7192-58220	COVER AIR CLEANER	1				0.44	0.968
050	E7192-11180	NUT WING	1				0.009	0.0198
060	E7194-11150	COVER INNER A/C	1				0.125	0.275
070	E7192-11020	SEAL INNER A/C COVER	1				0.001	0.0022
080	E7192-11220	PRECLEANER ELEMENT	1				0.001	0.0022
090	E7192-11210	ELEMENT A/C	1				0.3	0.66
100	E7194-91060	BOLT FLANGE	3				0.01	0.022
110	E7192-11030	BRACKET A/C BASE	1				0.055	0.121
120	E7192-11600	BASE AIR CLEANER	1				0.52	1.144
130	E7192-11510	GASKET A/C BASE	1				0.003	0.0066
140	E7192-31030	SCREW HEX.FLANGE	4				0.011	0.0242
150	E7192-11710	MINIFOLD INTAKE	1				0.7	1.54
160	E7192-46170	O-RING INTAKE PORT	2				0.001	0.0022
170	E7192-11810	GASKET CARBURETTOR	1				0.006	0.0132
180	E7192-18110	BRACKET AIR CLEANER	1				0.11	0.242
190	E7194-05220	BOLT FLANGE	2				0.006	0.0132

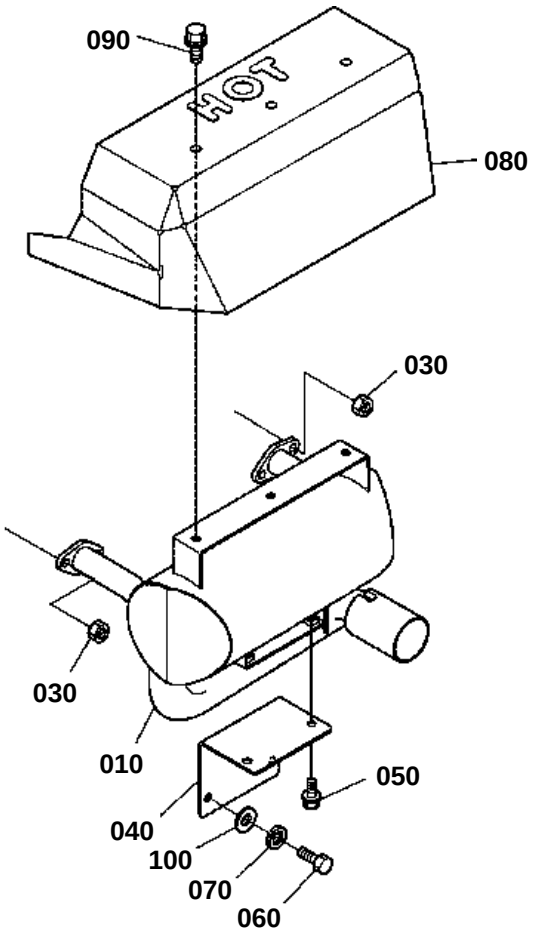

K3211-051-11

MUFFLER

↔ Interchangeable; ≠ not interchangeable; ← new for old; → old for new

REF.No	Part No.	Description	Q'ty	S.No.	I/C	REMARKS	Weight (kgf)	Weight (lb)
010	K3211-83110	MUFFLER	1				0	0
020	99999-99999	BLANK	0				0	0
030	16429-92010	NUT	4				0.007	0.0154
040	K3211-83130	SUPPORT MUFFLER	1				0	0
050	01754-50820	BOLT FLANGE	2				0.015	0.033
060	75599-03320	HEX.BOLT	2				0.02	0.044
070	04512-60100	WASHER SPRING	2				0.002	0.0044
080	K3211-83160	COVER MUFFLER	1				0	0
090	01754-50820	BOLT FLANGE	3				0.015	0.033
100	04013-60100	WASHER PLAIN	2				0.003	0.0066

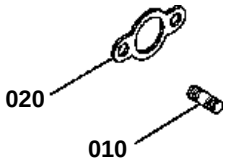

E7192-011-10

↔ Interchangeable; ≠ not interchangeable; ← new for old; → old for new

REF.No	Part No.	Description	Q'ty	S.No.	I/C	REMARKS	Weight (kgf)	Weight (lb)
010	E7194-91130	STUD	4				0.01	0.022
020	E7192-12230	GASKET	2				0.005	0.011

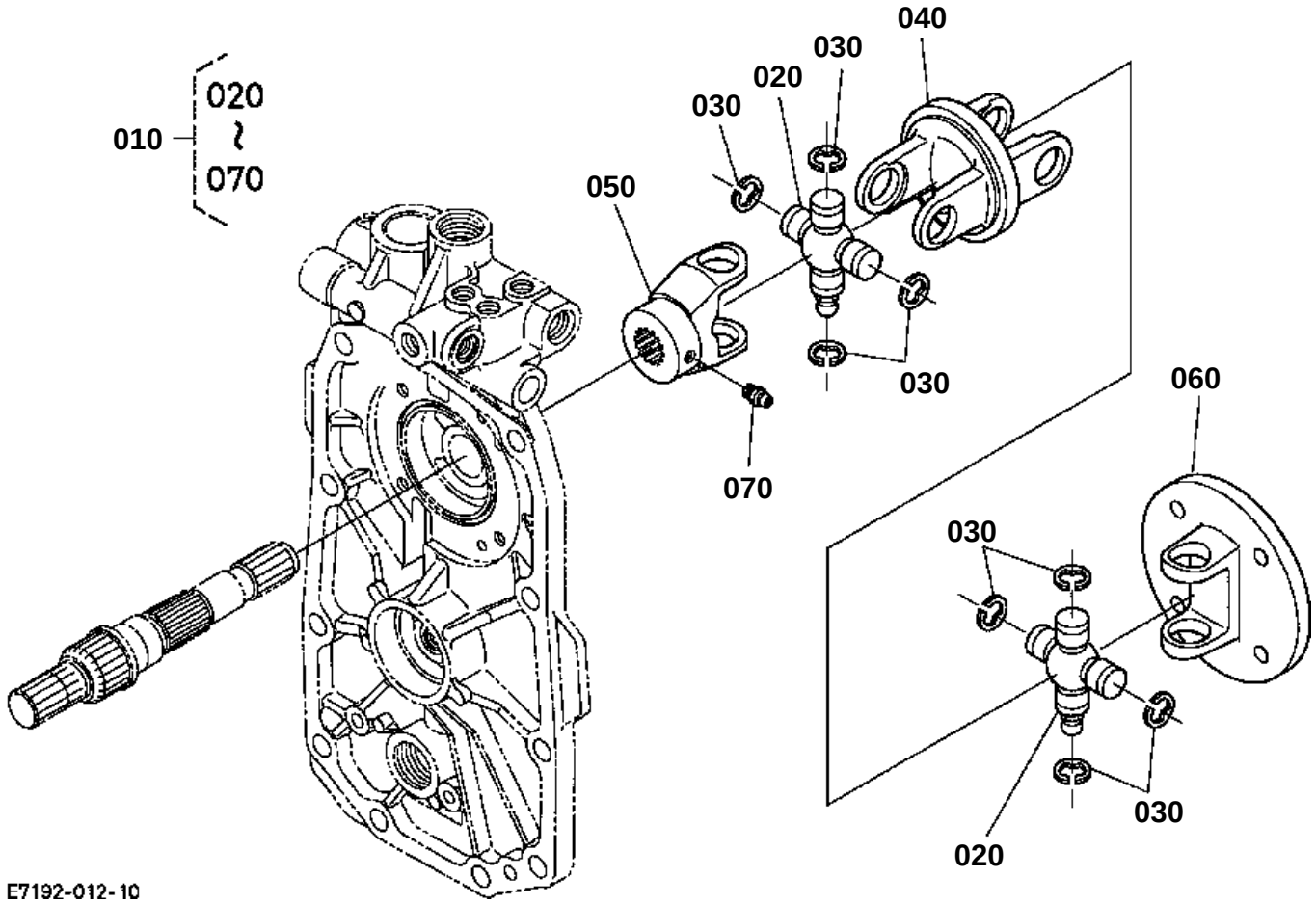
010
020
~
070
040
030
020
030
050
030
060
070
030
030
020
E7192-012-10

UNIVERSAL JOINT

↔ Interchangeable; ≠ not interchangeable; ← new for old; → old for new

REF.No	Part No.	Description	Q'ty	S.No.	I/C	REMARKS	Weight (kgf)	Weight (lb)
010	K3211-13510	JOINT UNIVERSAL	1				1.85	4.07
020	37410-13722	KIT JOINT	2				0.18	0.396
030	37410-13760	CIR CLIP EXTERNAL	8				0.002	0.0044
040	K3511-13520	YOKE CLAMP	1				0.003	0.0066
050	K3211-81640	YOKE SLEEVE	1				0.22	0.484
060	K3211-13570	SHAFT ENGINE FLANGE	1				0.63	1.386
070	67211-42940	NIPPLE GREASE	1				0.001	0.0022

010

020

E7192-013-10

↔ Interchangeable; ≠ not interchangeable; ← new for old; → old for new

REF.No	Part No.	Description	Q'ty	S.No.	I/C	REMARKS	Weight (kgf)	Weight (lb)
010	E7192-35710	DECAL OIL COOLER	1				0.002	0.0044
020	E7192-35730	DECAL OIL SENTRY	1				0.002	0.0044

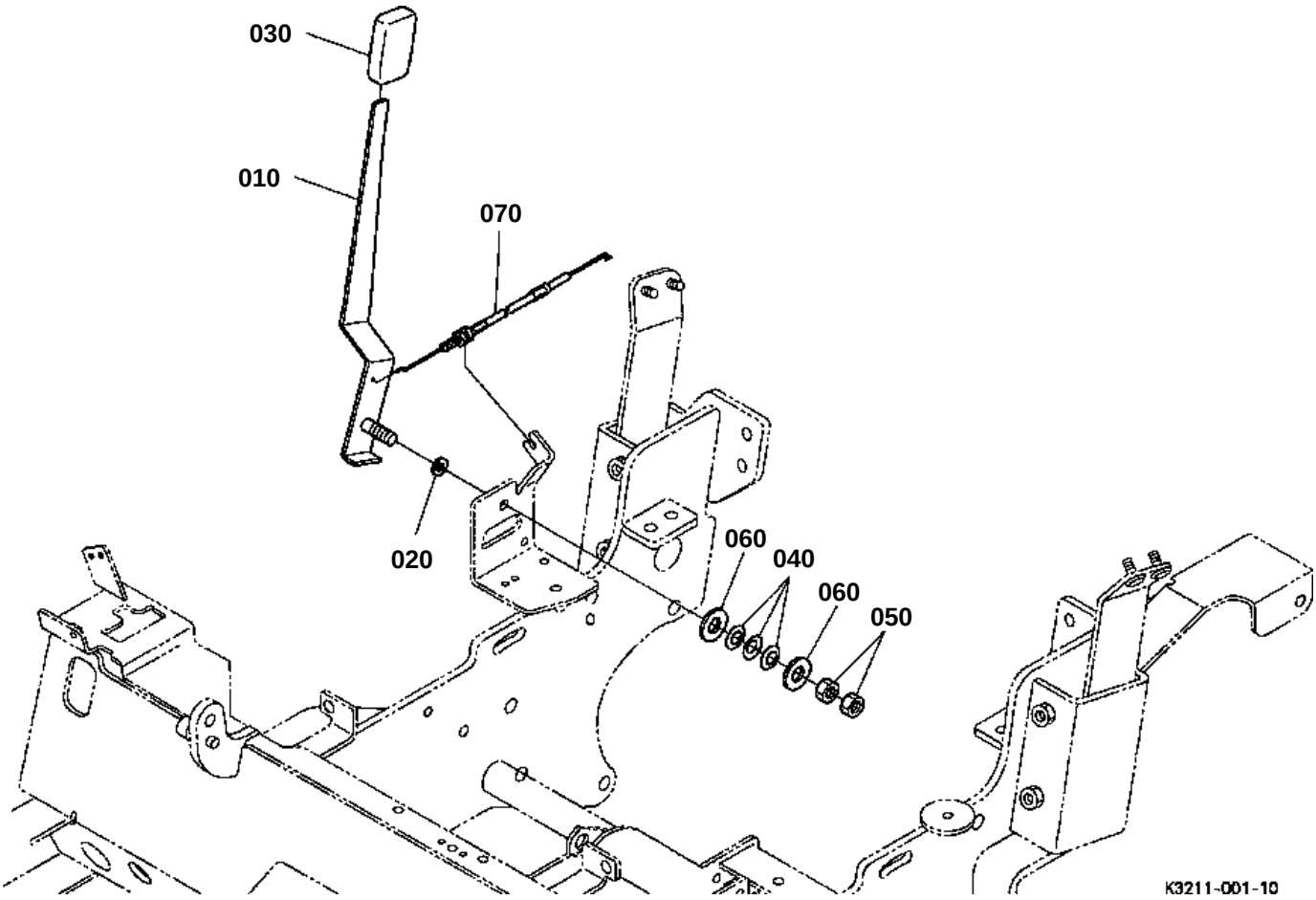
030
010
070
020
060
040
060
050
K3211-001-10

ACCELERATOR LEVER

↔ Interchangeable; ≠ not interchangeable; ← new for old; → old for new

REF.No	Part No.	Description	Q'ty	S.No.	I/C	REMARKS	Weight (kgf)	Weight (lb)
010	K3211-45110	LEVER ACCEL.	1				0	0
020	04013-60080	WASHER PLAIN	1				0.002	0.0044
030	K1122-45120	GRIP ACCEL	1				0.03	0.066
040	6C040-36880	SPRING PLATE	3				0.003	0.0066
050	02114-50080	NUT	2				0.005	0.011
060	04015-60080	WASHER PLAIN	2				0.01	0.022
070	K3211-45150	WIRE ENGINE	1				0	0

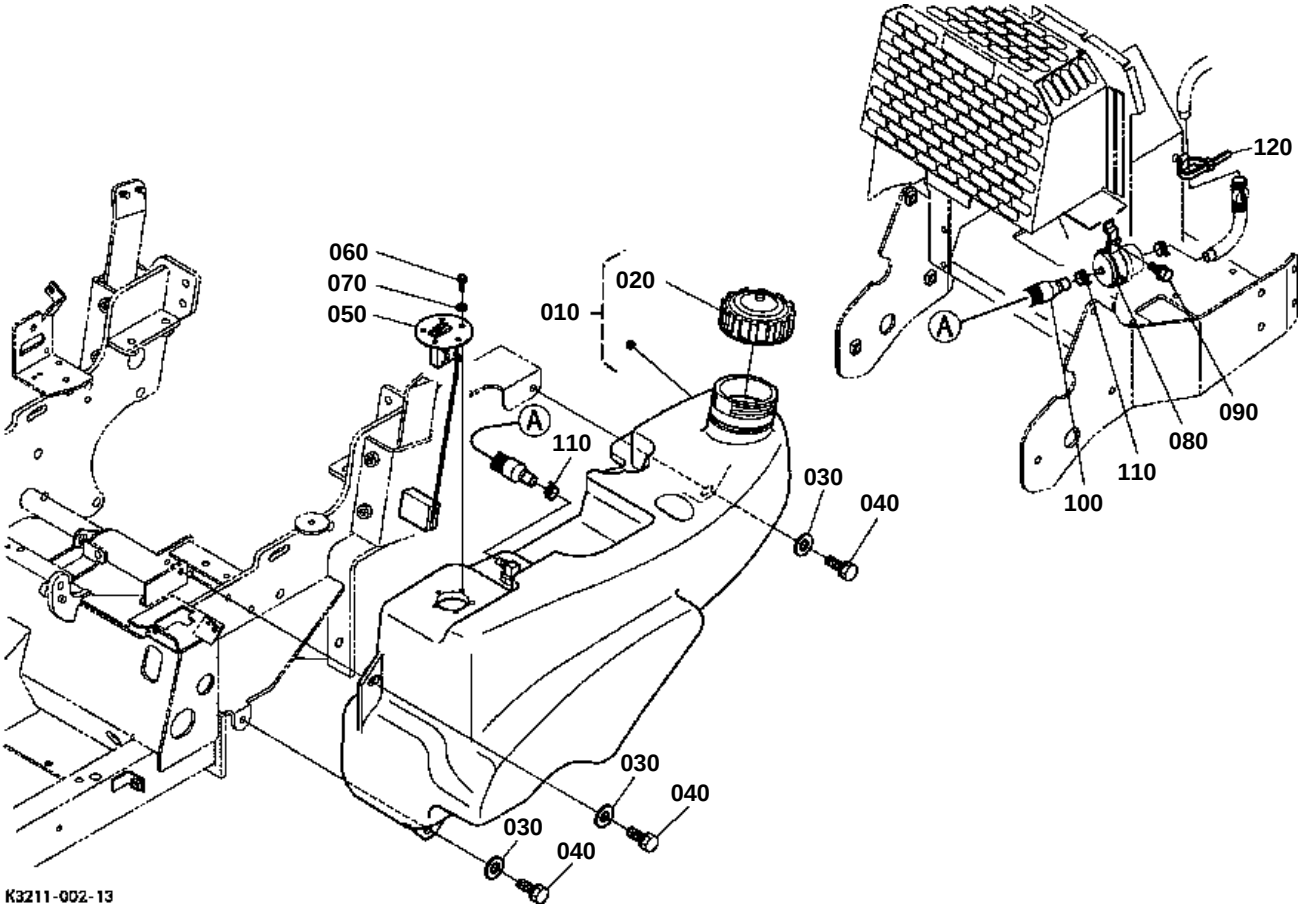
060
070
050
010
020
110
030
040
030
040
030
040
120
090
080
110
100
A
A
K3211-002-13

FUEL TANK

↔ Interchangeable; ≠ not interchangeable; ← new for old; → old for new

REF.No	Part No.	Description	Q'ty	S.No.	I/C	REMARKS	Weight (kgf)	Weight (lb)
010	K3211-24000	ASSY TANK FUEL	1				5	11
020	K1211-24120	CAP FUEL	1				0.1	0.22
030	04015-60080	WASHER PLAIN	3				0.01	0.022
040	01123-50825	BOLT	3				0.013	0.0286
050	K3211-61250	SENSOR FUEL	1				0.13	0.286
060	03024-50516	SCREW WITH WASHER	5				0.004	0.0088
070	04012-50050	WASHER PLAIN	5				0.001	0.0022
080	K3211-24110	BAND FILTER	1				0.025	0.055
090	01754-50616	BOLT FLANGE	1				0.006	0.0132
100	K3211-24020	HOSE FUEL	1				0	0
110	E7194-30110	CLAMP HOSE	2				0.008	0.0176
120	K1211-61250	CLAMP CORD	1				0.001	0.0022

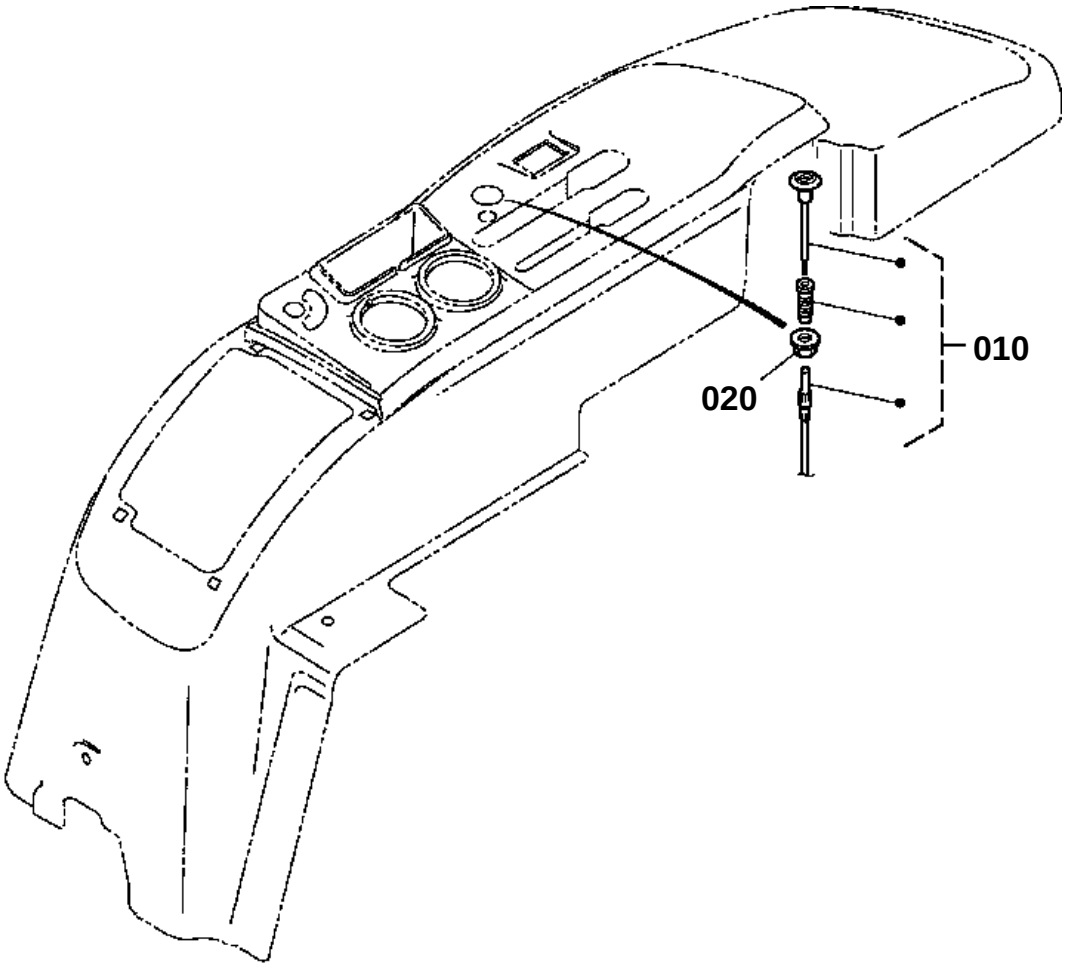

K3211-003-11

↔ Interchangeable; ≠ not interchangeable; ← new for old; → old for new

REF.No	Part No.	Description	Q'ty	S.No.	I/C	REMARKS	Weight (kgf)	Weight (lb)
010	K3211-45513	WIRE ASSY. CHOKE	1				0.48	1.056
020	02771-60100	NUT FLANGE	1				0.01	0.022

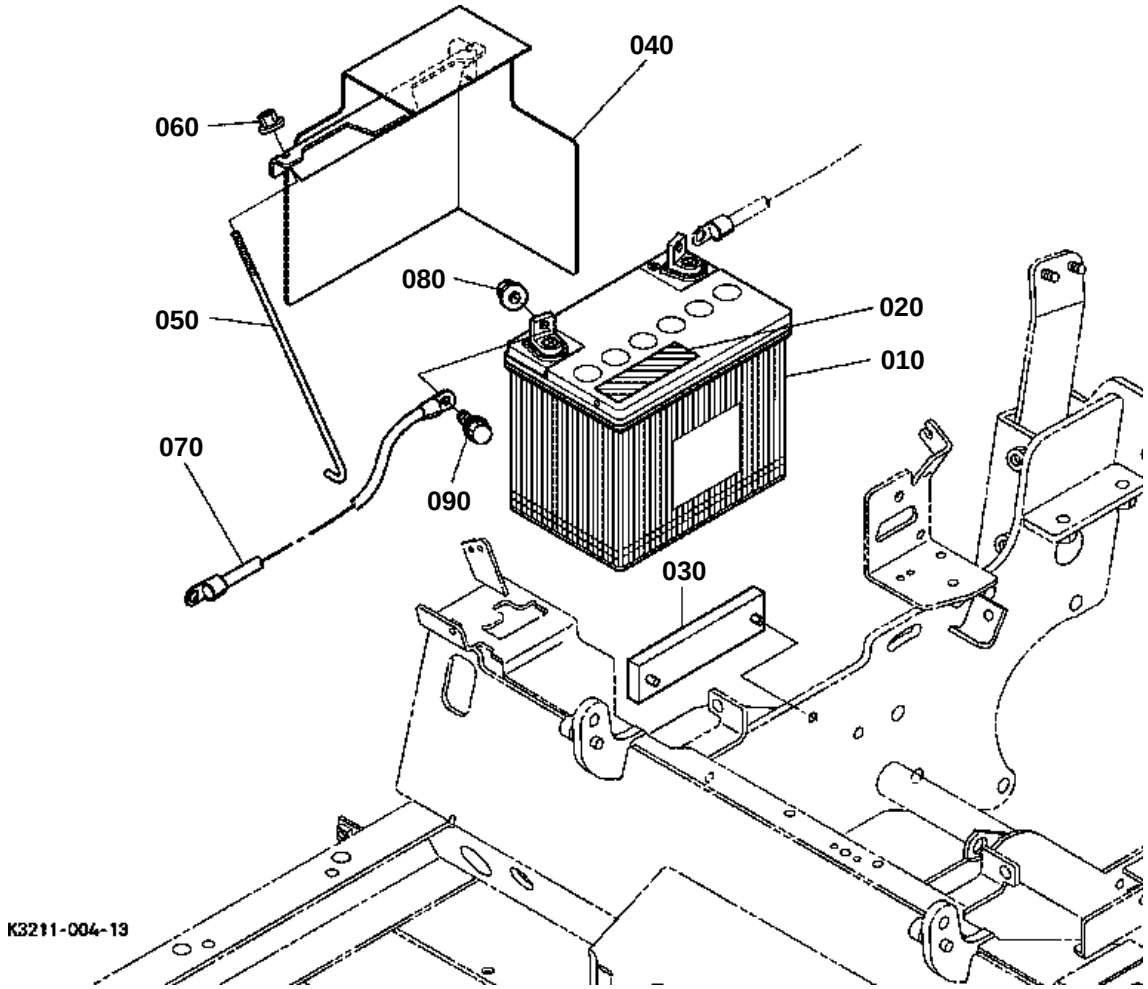
040
060
080
050
020
010
070
090
030
K3211-004-13

BATTERY

↔ Interchangeable; ≠ not interchangeable; ← new for old; → old for new

REF.No	Part No.	Description	Q'ty	S.No.	I/C	REMARKS	Weight (kgf)	Weight (lb)
010	K1221-95610	BATTERY DRY	1				6	13.2
020	K1221-61170	LABEL	1				0.001	0.0022
030	K3211-61422	CUSHION	1				0.25	0.55
040	K3211-61442	COVER BATTERY	1				1.57	3.454
050	K1122-61130	ROD BATTERY	2				0.04	0.088
060	02751-50060	NUT FLANGE	2				0.005	0.011
070	K3211-61350	CABLE BATTERY(-)	1				0	0
080	02751-50060	NUT FLANGE	2				0.005	0.011
090	01754-50616	BOLT FLANGE	2				0.006	0.0132

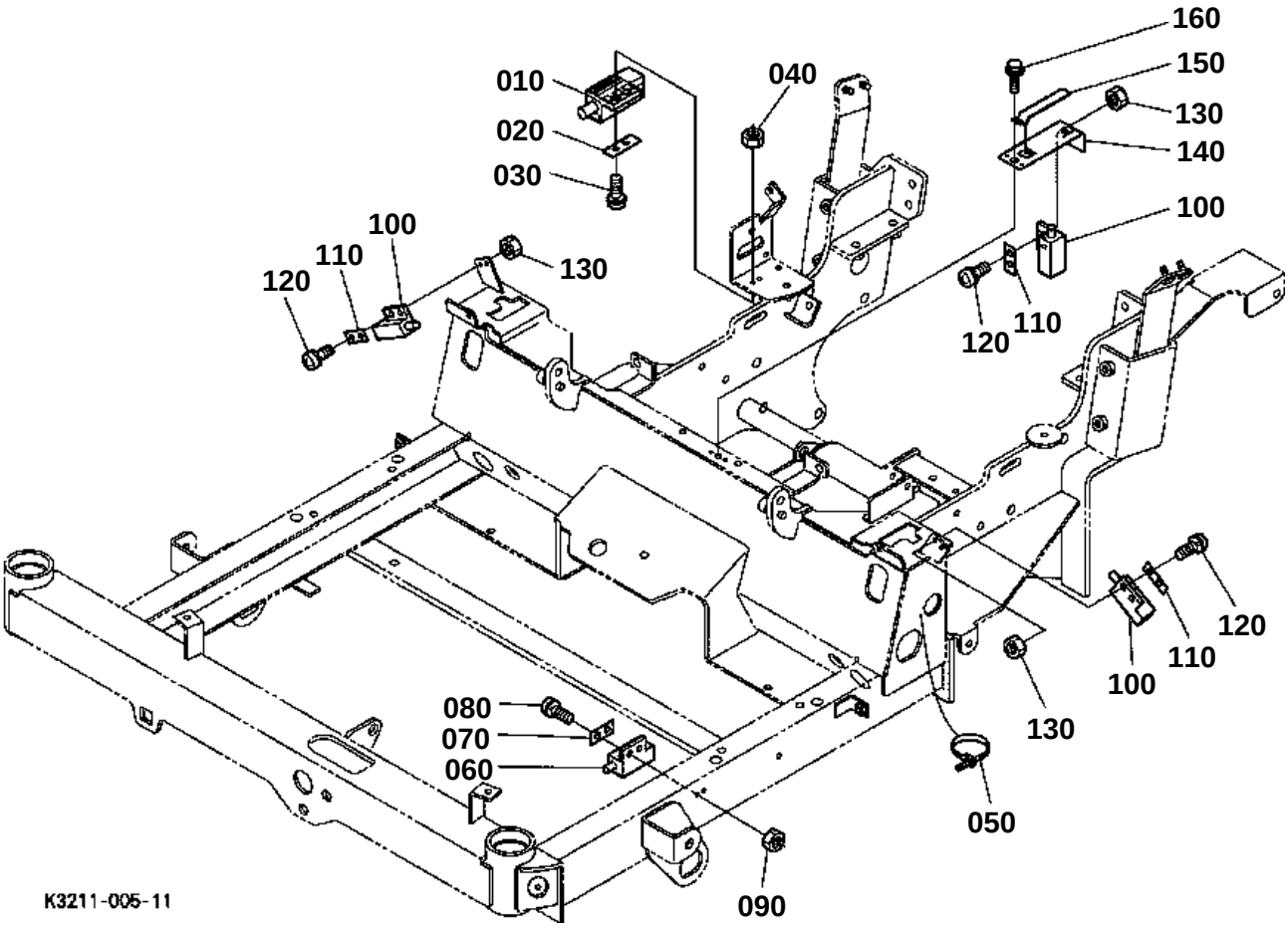
160
150
130
140
100
010
020
030
040
100
110
120
130
120
110
120
110
100
130
080
070
060
050
090
K3211-005-11

↔ Interchangeable; ≠ not interchangeable; ← new for old; → old for new

REF.No	Part No.	Description	Q'ty	S.No.	I/C	REMARKS	Weight (kgf)	Weight (lb)
010	K2561-62250	SWITCH SAFETY	1				0.017	0.0374
020	K2561-62260	PLATE SWITCH	1				0.001	0.0022
030	03024-50520	SCREW WITH WASHER	2				0.004	0.0088
040	02054-50050	NUT	2				0.002	0.0044
050	K1211-61250	CLAMP CORD	1				0.001	0.0022
060	K3211-62250	SWITCH BRAKE	1				0.18	0.396
070	K2561-62260	PLATE SWITCH	1				0.001	0.0022
080	03024-50520	SCREW WITH WASHER	2				0.004	0.0088
090	02054-50050	NUT	2				0.002	0.0044
100	K1122-62250	SWITCH SAFETY	3				0.02	0.044
110	K2561-62260	PLATE SWITCH	3				0.001	0.0022
120	03024-50520	SCREW WITH WASHER	6				0.004	0.0088
130	02054-50050	NUT	6				0.002	0.0044
140	K3211-56233	STAY OPC SWITCH	1				0.184	0.4048
150	K3211-56240	PLATE OPC SWITCH	1				0	0
160	01754-50820	BOLT FLANGE	1				0.015	0.033

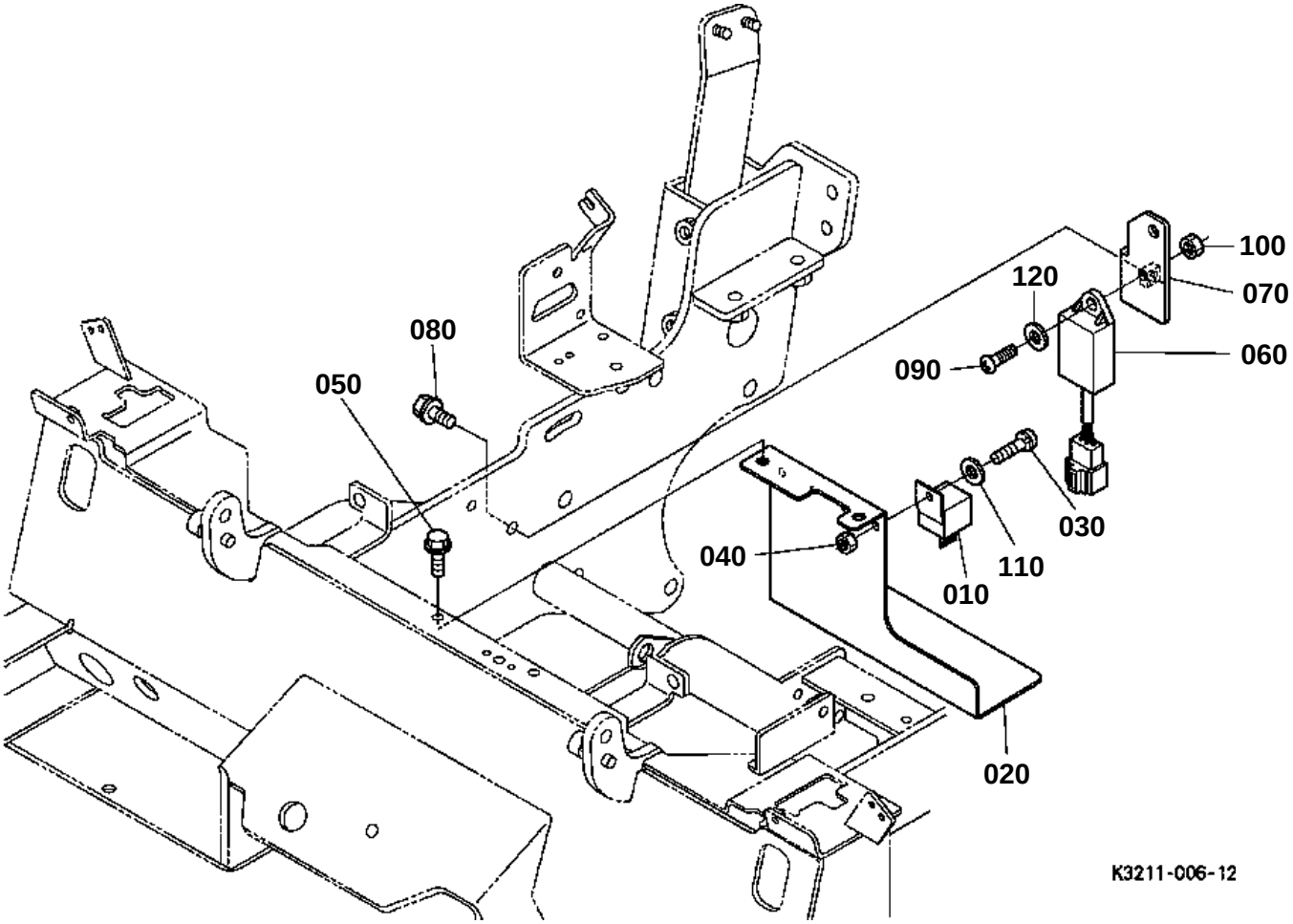
100
070
120
060
090
080
050
030
040
110
010
020
K3211-006-12

↔ Interchangeable; ≠ not interchangeable; ← new for old; → old for new

REF.No	Part No.	Description	Q'ty	S.No.	I/C	REMARKS	Weight (kgf)	Weight (lb)
010	K1122-62260	RELAY	4				0.04	0.088
020	K3211-61470	STAY RELAY	1				0	0
030	03024-50520	SCREW WITH WASHER	4				0.004	0.0088
040	02054-50050	NUT	4				0.002	0.0044
050	01754-50820	BOLT FLANGE	2				0.015	0.033
060	K3211-62290	TIMER DELAY	1				0.036	0.0792
070	K3211-61482	STAY TIMER	1				0	0
080	01754-50820	BOLT FLANGE	1				0.015	0.033
090	03024-50520	SCREW WITH WASHER	1				0.004	0.0088
100	02054-50050	NUT	1				0.002	0.0044
110	04013-60050	WASHER PLAIN	4				0.001	0.0022
120	04013-60050	WASHER PLAIN	1				0.001	0.0022

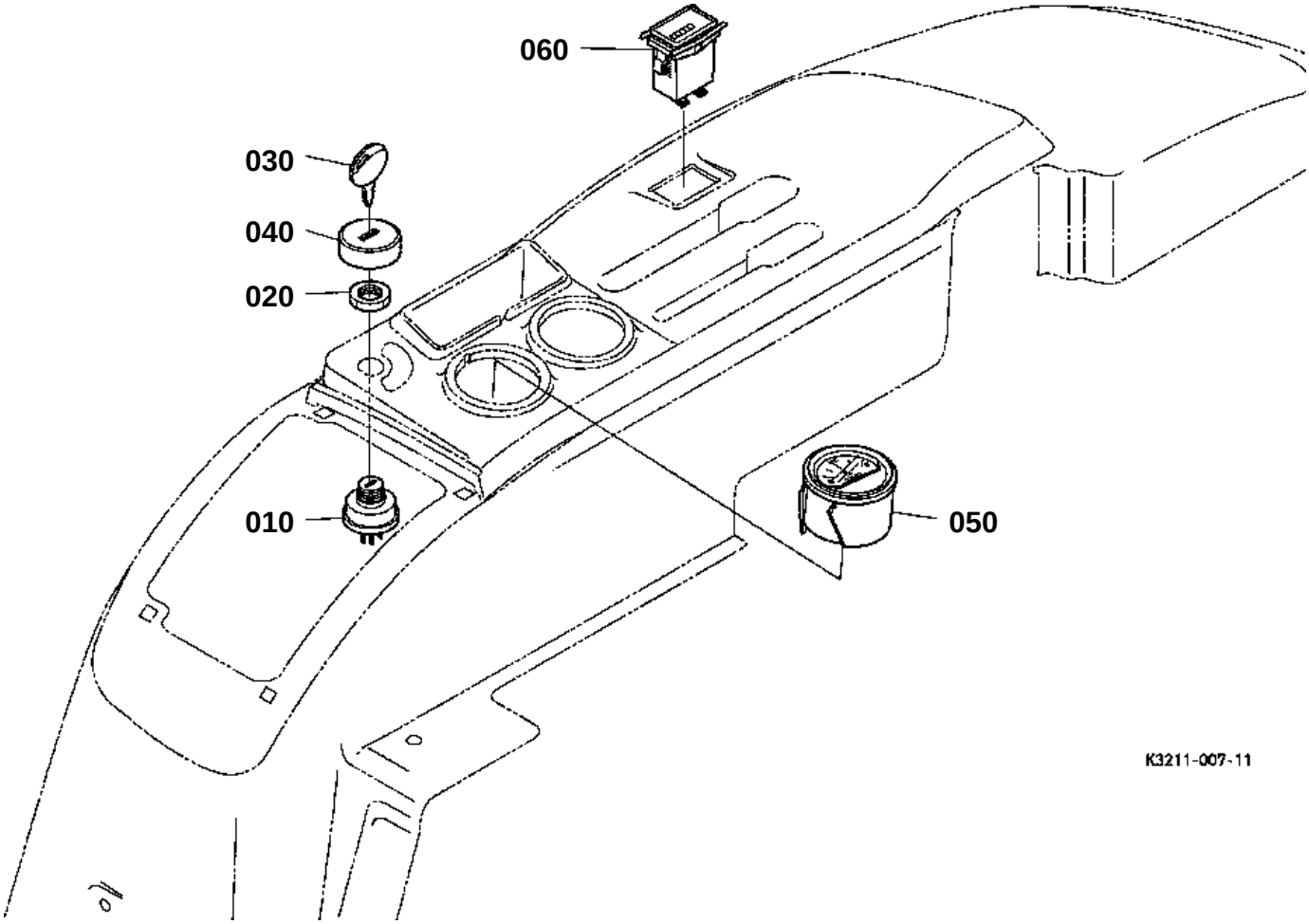
060
030
040
020
010
050
K3211-007-11

↔ Interchangeable; ≠ not interchangeable; ← new for old; → old for new

REF.No	Part No.	Description	Q'ty	S.No.	I/C	REMARKS	Weight (kgf)	Weight (lb)
010	K1122-62110	SWITCH MAIN	1				0.06	0.132
020	K1122-62150	NUT SWITCH MAIN	1				0.015	0.033
030	K1122-62130	KEY MAIN SWITCH	2				0.009	0.0198
040	K1122-62160	COVER MAIN SWITCH	1				0.004	0.0088
050	K3211-61120	FUEL GAUGE ASSY	1	<=10008			0	0
050	K3211-61122	FUEL GAUGE ASSY	1	>=10009	←		0.2	0.44
060	K2561-62510	METER HOUR	1				0.12	0.264

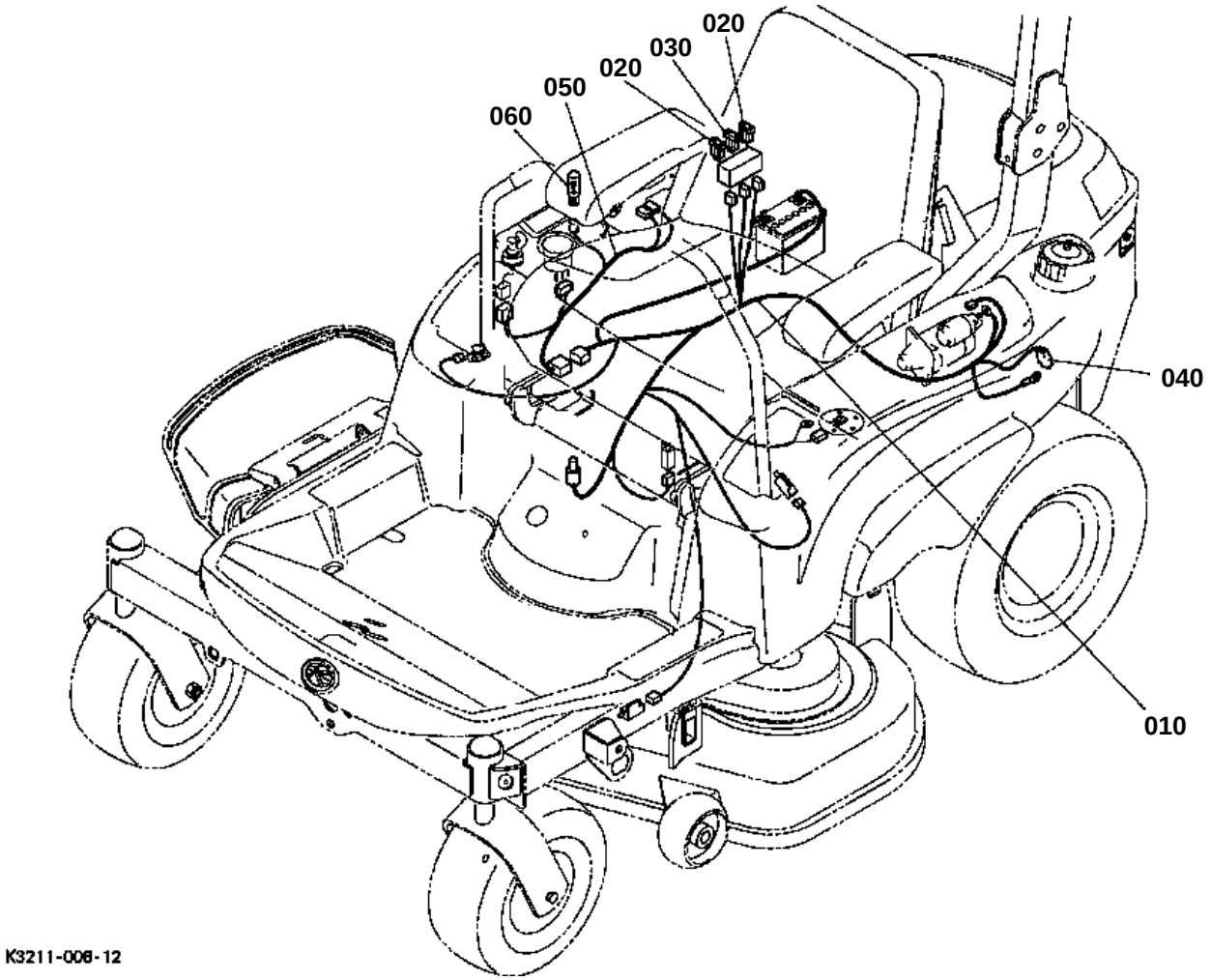
020
030
020
050
060
040
010
K3211-008-12

↔ Interchangeable; ≠ not interchangeable; ← new for old; → old for new

REF.No	Part No.	Description	Q'ty	S.No.	I/C	REMARKS	Weight (kgf)	Weight (lb)
010	K3211-61220	ELECTRICAL WIRING	1	<=10004			0	0
010	K3211-61226	ELECTRICAL WIRING	1	>=10005	←		0	0
010	K3211-61227	ELECTRICAL WIRING	1	>=10006	←		0	0
020	35820-75560	FUSE	2				0.002	0.0044
030	48100-55880	FUSE AUTO	1				0.01	0.022
040	T1060-30520	FUSE	1				0.007	0.0154
050	K3211-61240	ELECTRICAL WIRING	1				0	0
060	K1142-62350	BULB	1				0.01	0.022

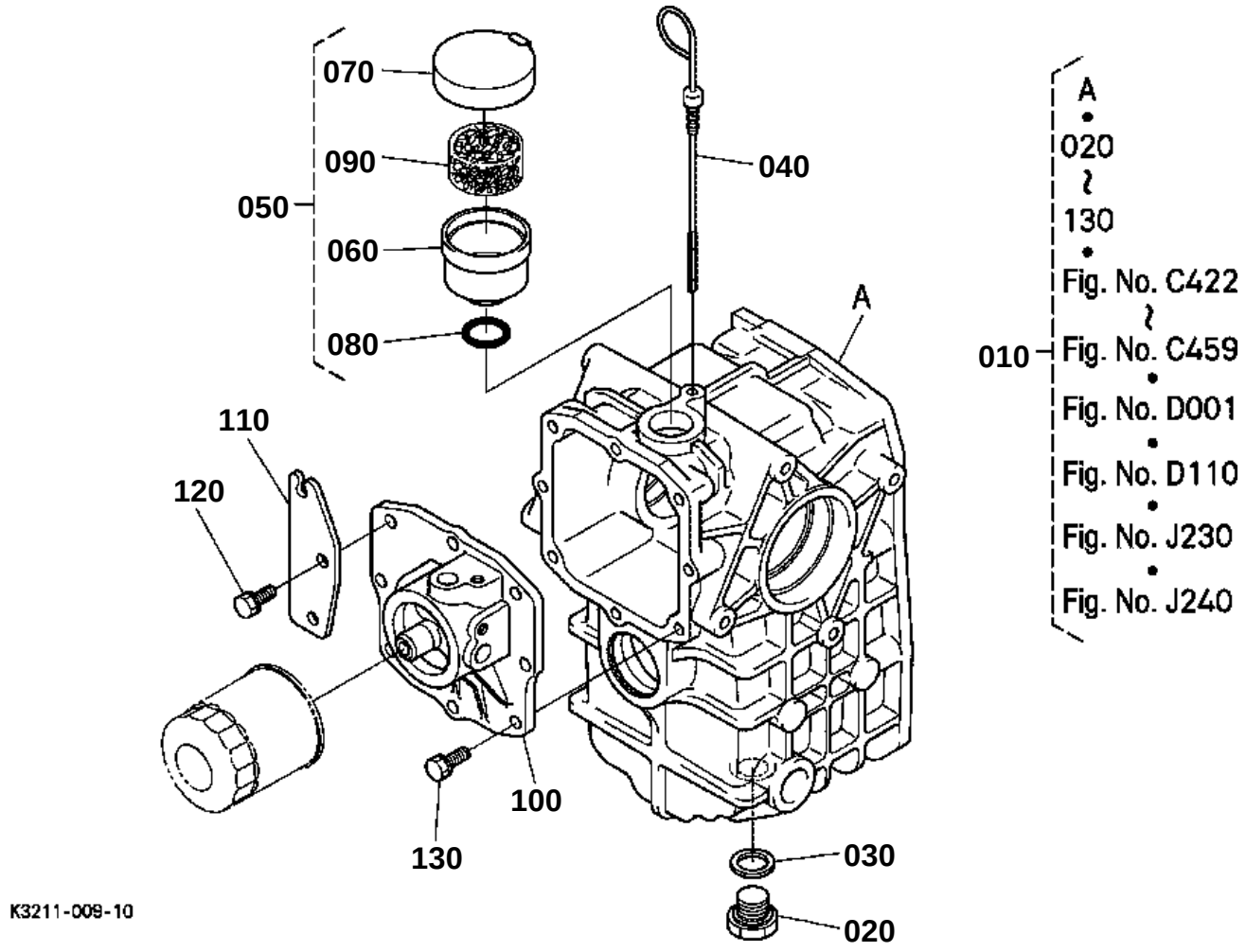
070
090
050
060
080
040
A
110
120
100
130
030
020
010
A
020
130
Fig. No. C422
Fig. No. C459
Fig. No. D001
Fig. No. D110
Fig. No. J230
Fig. No. J240
K3211-009-10

↔ Interchangeable; ≠ not interchangeable; ← new for old; → old for new

REF.No	Part No.	Description	Q'ty	S.No.	I/C	REMARKS	Weight (kgf)	Weight (lb)
010	K3211-10003	KIT TRANSMISSION	1				0	0
020	06331-35020	PLUG	1				0.068	0.1496
030	04717-02000	WASHER WITH RUBBER	1				0.004	0.0088
040	K3111-36510	GAUGE OIL	1				0.02	0.044
050	K3511-36694	ASSY PIPE BREATHER	1				0.07	0.154
060	K3511-36682	PIPE BREATHER	1				0.01	0.022
070	K3151-36710	CAP BEATHER PIPE	1				0.015	0.033
080	04816-00240	O RING	1				0.003	0.0066
090	16241-05670	ELEMENT BREATHER	1				0.01	0.022
100	K3211-11210	COVER CENTER FRONT	1				0.56	1.232
110	K3211-12550	STAY WIRE	1				0.14	0.308
120	01123-50830	BOLT	2				0.015	0.033
130	01123-50825	BOLT	6				0.013	0.0286

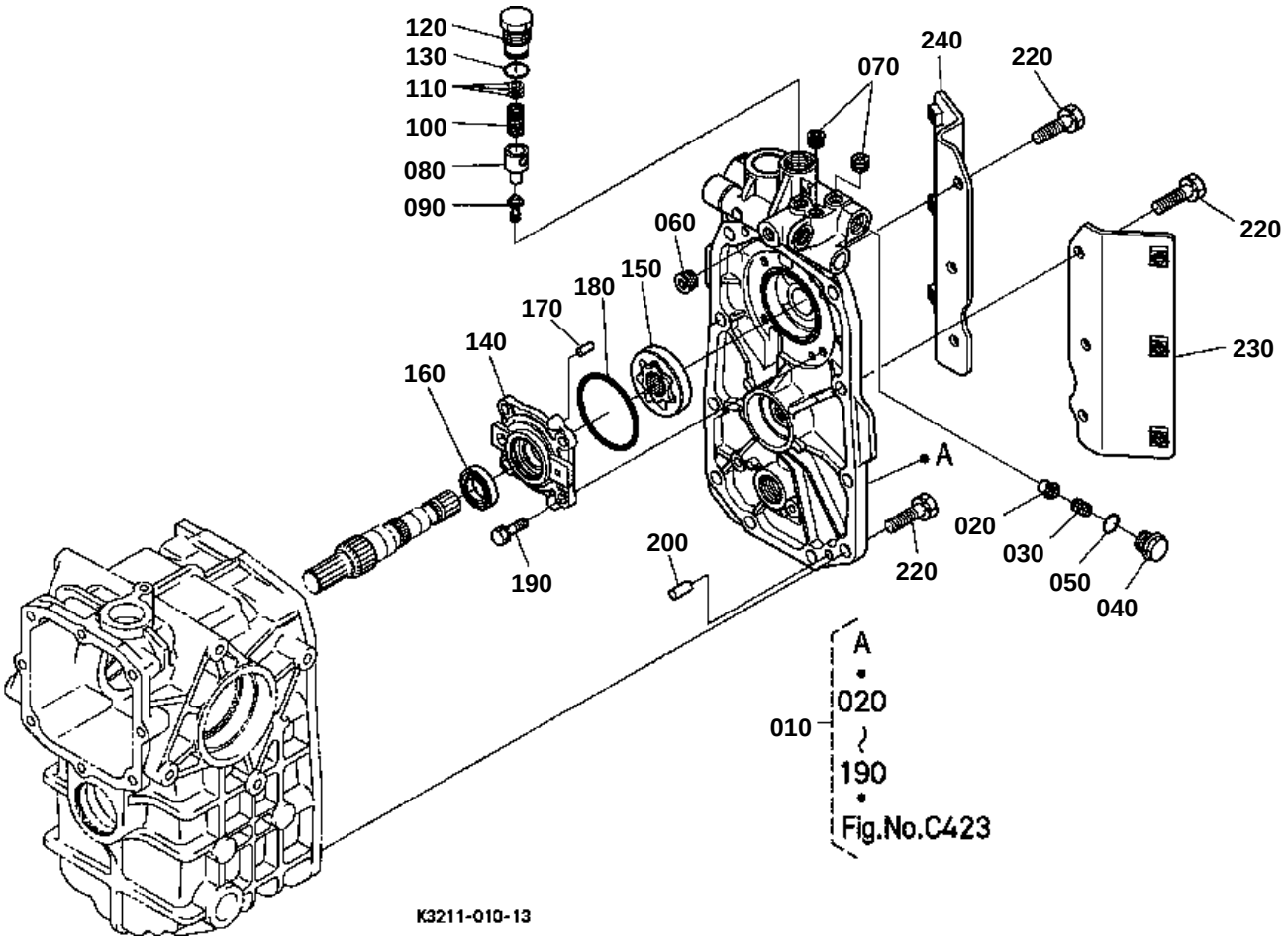
120
130
110
100
080
090
070
240
220
060
150
180
170
140
160
220
230
A
020
030
050
040
190
200
220
010
A
020
190
Fig.No.C423
K3211-010-13

CHARGE PUMP CASE

↔ Interchangeable; ≠ not interchangeable; ← new for old; → old for new

REF.No	Part No.	Description	Q'ty	S.No.	I/C	REMARKS	Weight (kgf)	Weight (lb)
010	K3211-11124	ASSY COVER CENTER	1				3.82	8.404
020	66363-39710	POPPET L	1				0.006	0.0132
030	K3151-11160	SPRING CHARGE	1				0.003	0.0066
040	5H600-12620	PLUG	1				0.021	0.0462
050	04817-00140	O RING	1				0.001	0.0022
060	K7001-39620	PLUG	1				0.005	0.011
070	15521-96020	PLUG	4				0.003	0.0066
080	31351-37930	SEAT RELIEF VALVE	1				0.02	0.044
090	31351-37940	POPPET	1				0.005	0.011
100	37410-37330	SPRING	1				0.01	0.022
110	67156-36660	SHIM ADJUSTING	2			0.3mm	0.001	0.0022
110	67156-36670	SHIM ADJUSTING	1			0.8mm	0.002	0.0044
110	67156-36680	SHIM ADJUSTING	1			0.2mm	0.001	0.0022
120	K3211-36530	PLUG	1				0.07	0.154
130	04811-10160	O RING	1				0.001	0.0022
140	K3211-11180	COVER CHARGE PUMP	1				0.12	0.264
150	6A000-39820	ROTOR	1				0.15	0.33
160	09400-25356	SEAL OIL	1				0.036	0.0792
170	05012-00612	PIN STRAIGHT	2				0.003	0.0066
180	04811-06630	O RING	1				0.001	0.0022
190	01123-50822	BOLT	4				0.012	0.0264
200	05012-00818	PIN STRAIGHT	2				0.013	0.0286
210	01123-61040	BOLT	6				0.029	0.0638
220	01123-51035	BOLT	4				0.025	0.055
230	K3211-16830	PLATE CONNECTION-LH	1				0.69	1.518
240	K3211-16840	PLATE CONNECTION-RH	1				0.85	1.87

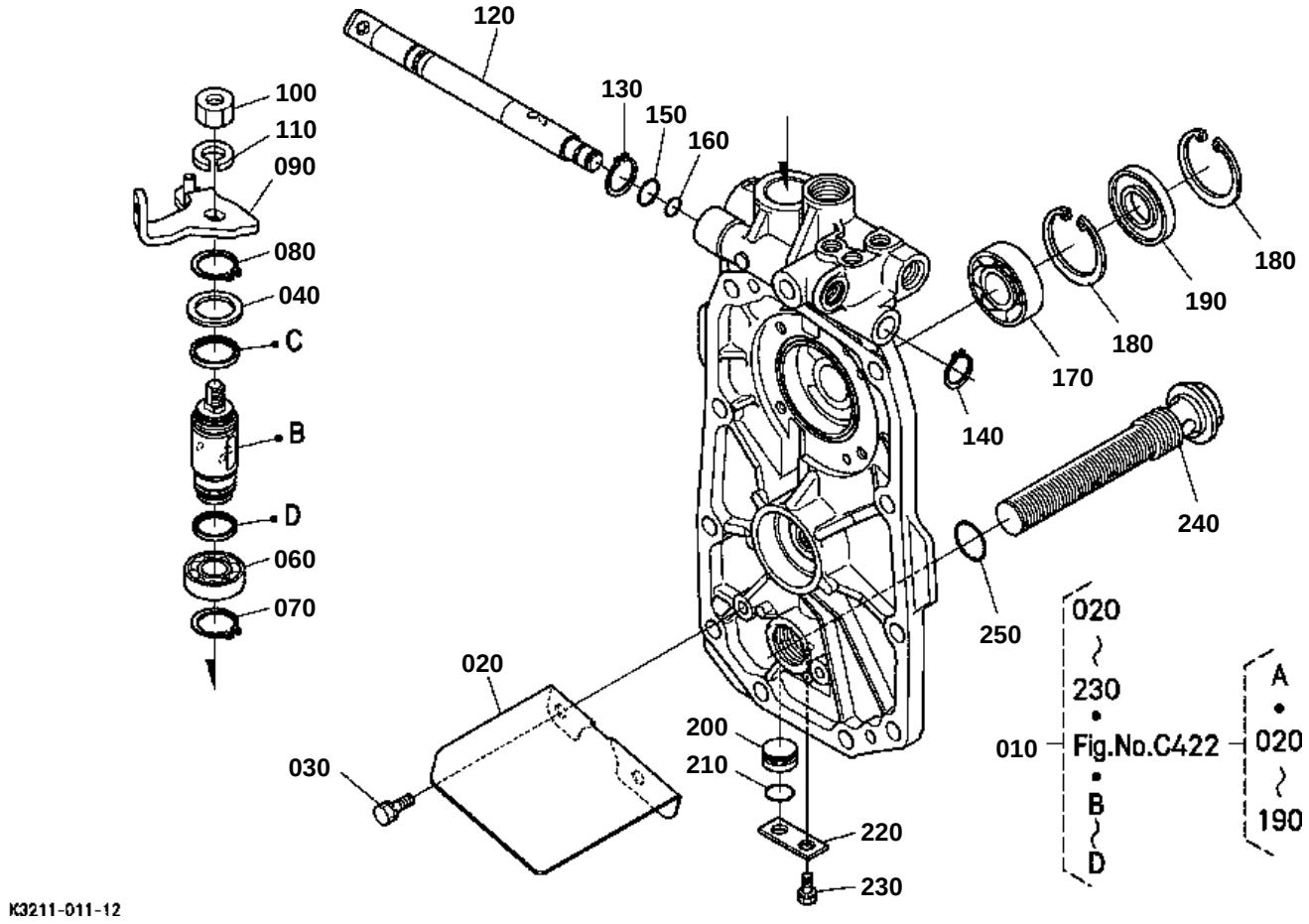
120
100
110
090
130
150
160
080
040
C
B
D
060
070
180
190
180
170
140
240
250
020
230
010
Fig.No.C422
A
020
190
B
D
020
030
200
210
220
230
K3211-011-12

CENTER COVER 2

↔ Interchangeable; ≠ not interchangeable; ← new for old; → old for new

REF.No	Part No.	Description	Q'ty	S.No.	I/C	REMARKS	Weight (kgf)	Weight (lb)
010	K3211-11124	ASSY COVER CENTER	1				3.82	8.404
020	K3211-14100	PLATE STRAINER	1				0.21	0.462
030	01123-50818	BOLT	2				0.012	0.0264
040	K3211-16670	SPACER	1				0	0
050	99999-99999	BLANK	0				0	0
060	08141-06002	BEARING BALL	1				0.029	0.0638
070	04612-00220	CIR CLIP EXTERNAL	1				0.001	0.0022
080	K7021-39140	CIR CLIP EXTERNAL	1				0.001	0.0022
090	K3211-16682	ARM LIFT T/M	1				0.075	0.165
100	02118-50100	NUT	1				0.005	0.011
110	04512-60100	WASHER SPRING	1				0.002	0.0044
120	K3211-25760	LEVER PTO VALVE	1				0.28	0.616
130	04612-00170	CIR CLIP EXTERNAL	1				0.001	0.0022
140	04612-00120	CIR CLIP EXTERNAL	1				0.001	0.0022
150	04816-05140	O RING	1				0.002	0.0044
160	04816-00090	O RING	1				0.001	0.0022
170	PL501-12160	BEARING	1				0.1	0.22
180	04611-00470	CIR CLIP INTERNAL	2				0.006	0.0132
190	09500-20477	SEAL OIL	1				0.018	0.0396
200	K3211-11550	PLUG	1				0.021	0.0462
210	04817-00160	O RING	1				0.001	0.0022
220	K3211-11560	PLATE PLUG	1				0.009	0.0198
230	01123-60814	BOLT	1				0.01	0.022
240	K3111-36390	FILTER OIL	1				0.19	0.418
250	04811-10300	O RING	1				0.001	0.0022

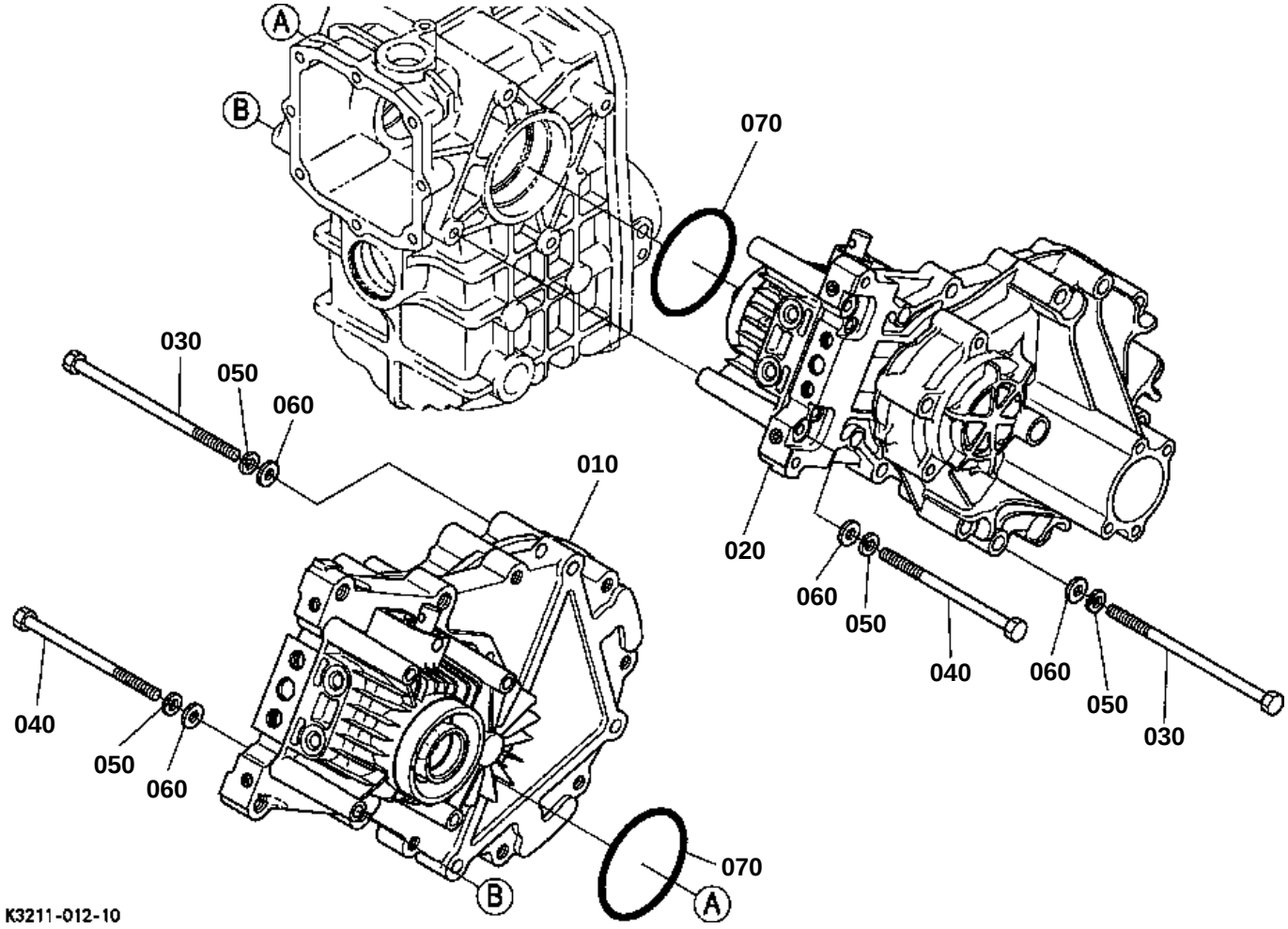
A
B
070
030
050
060
010
020
060
050
040
060
050
030
040
050
060
070
B
A
K3211-012-10

↔ Interchangeable; ≠ not interchangeable; ← new for old; → old for new

REF.No	Part No.	Description	Q'ty	S.No.	I/C	REMARKS	Weight (kgf)	Weight (lb)
010	K3211-12002	AXLE ASSY HST-RH	1				0	0
020	K3211-13002	AXLE ASSY HST-LH	1				0	0
030	K3211-11230	BOLT	4				0.06	0.132
040	K7561-14040	BOLT	4				0.048	0.1056
050	04512-60080	WASHER SPRING	8				0.002	0.0044
060	04013-60080	WASHER PLAIN	8				0.002	0.0044
070	K3111-11310	O RING	2				0.002	0.0044

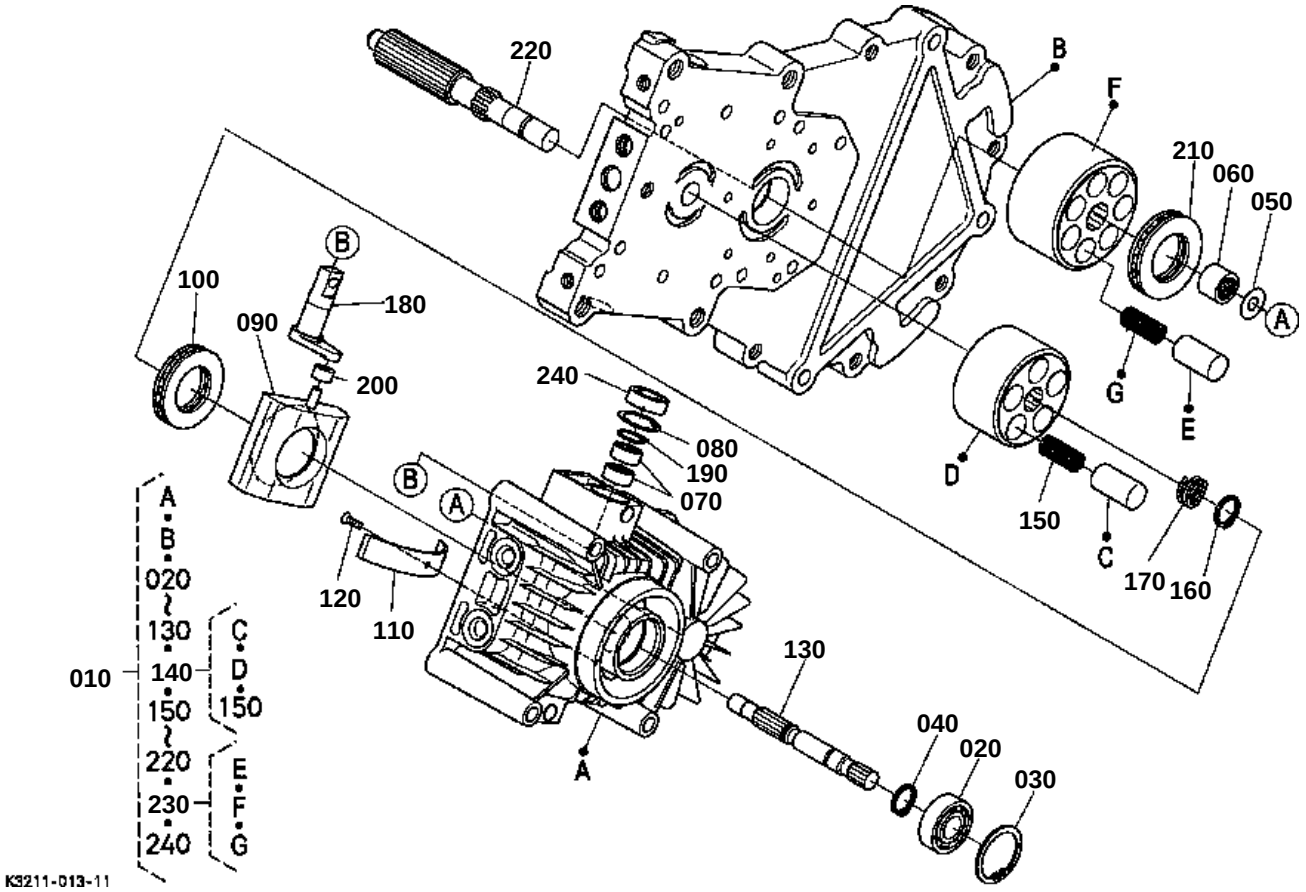
220
B
F
210
060
050
A
100
B
180
090
200
240
080
190
070
G
E
D
150
C
170
160
B
A
120
110
130
040
020
030
A
010
A
B
020
130
140
150
220
230
240
C
D
150
E
F
G
K3211-013-11

↔ Interchangeable; ≠ not interchangeable; ← new for old; → old for new

REF.No	Part No.	Description	Q'ty	S.No.	I/C	REMARKS	Weight (kgf)	Weight (lb)
010	K3211-12002	AXLE ASSY HST-RH	1				0	0
020	K3211-11650	BEARING	1				0.08	0.176
030	04611-00420	CIR CLIP INTERNAL	1				0.006	0.0132
040	04612-00150	CIR CLIP EXTERNAL	1				0.001	0.0022
050	6A110-35240	COLLAR	1				0.002	0.0044
060	6A110-35122	BEARING NEEDLE	1				0.023	0.0506
070	08101-06902	BEARING BALL	2				0.007	0.0154
080	04611-00280	CIR CLIP INTERNAL	1				0.002	0.0044
090	K7021-39112	SWASH PLATE	1				0.24	0.528
100	K7021-38120	BEARING THRUST BALL	1				0.1	0.22
110	K7021-39220	BEARING CRADLE	2				0.015	0.033
120	03056-50308	SCREW CSK-HD	2				0.001	0.0022
130	K3211-11140	SHAFT	1				0.19	0.418
140	K7021-38300	ASSY BLOCK CYL.(P)	1				0.61	1.342
150	K7021-39330	SPRING PISTON	5				0.006	0.0132
160	K7021-39140	CIR CLIP EXTERNAL	1				0.001	0.0022
170	K7021-39150	SPRING CYP	1				0.005	0.011
180	K2511-14520	SHAFT	1				0.1	0.22
190	K7021-39140	CIR CLIP EXTERNAL	1				0.001	0.0022
200	K7021-38170	BLOCK SWASH PLATE	1				0.005	0.011
210	5H550-19120	BEARING THRUST BALL	1				0.22	0.484
220	K3211-11170	SHAFT BRAKE HST-M	1				0.49	1.078
230	5H550-19400	ASSY BLOCK CYL.(M)	1				0.935	2.057
240	31381-76390	SEAL OIL	1				0.01	0.022

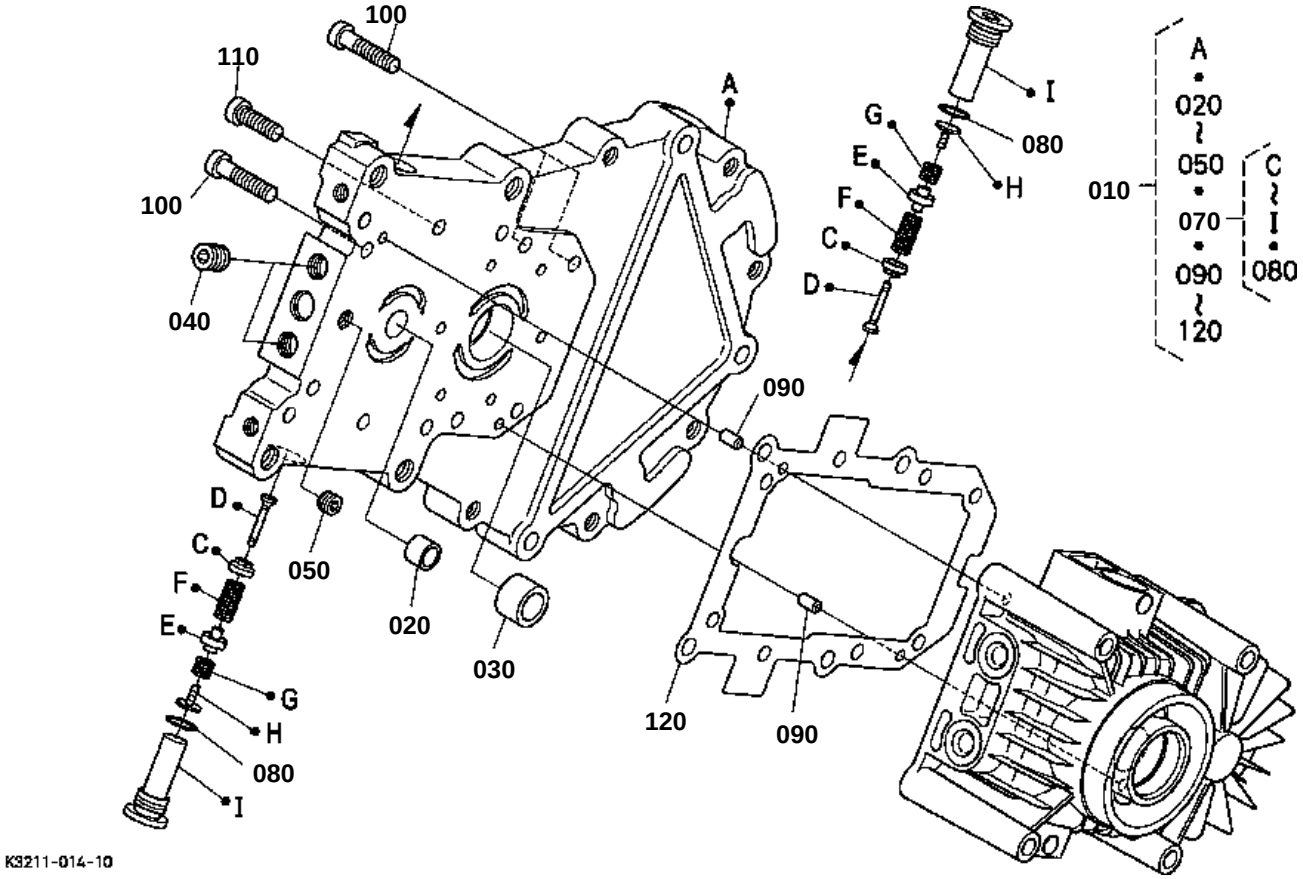
100
110
100
040
A
I
G
080
E
H
F
C
D
010
A
020
050
070
090
120
C
I
080
090
D
C
F
E
050
020
030
G
H
080
I
120
090
K3211-014-10

↔ Interchangeable; ≠ not interchangeable; ← new for old; → old for new

REF.No	Part No.	Description	Q'ty	S.No.	I/C	REMARKS	Weight (kgf)	Weight (lb)
010	K3211-11500	ASSY COVER PORTBLOCK	1				0	0
020	K7021-38020	BUSH	1				0.005	0.011
030	K3211-38020	BUSH	1				0.02	0.044
040	K7001-39620	PLUG	2				0.005	0.011
050	K7001-39610	PLUG	1				0.01	0.022
060	99999-99999	BLANK	0				0	0
070	K3211-11530	ASSY VALVE RELIEF	2				0.04	0.088
080	04817-00110	O RING	2				0.001	0.0022
090	05012-00612	PIN STRAIGHT	2				0.003	0.0066
100	01311-10835	BOLT HEX-SOC-HD	6				0.02	0.044
110	01311-10830	BOLT HEX-SOC-HD	2				0.015	0.033
120	K3211-39040	GASKET	1				0.004	0.0088

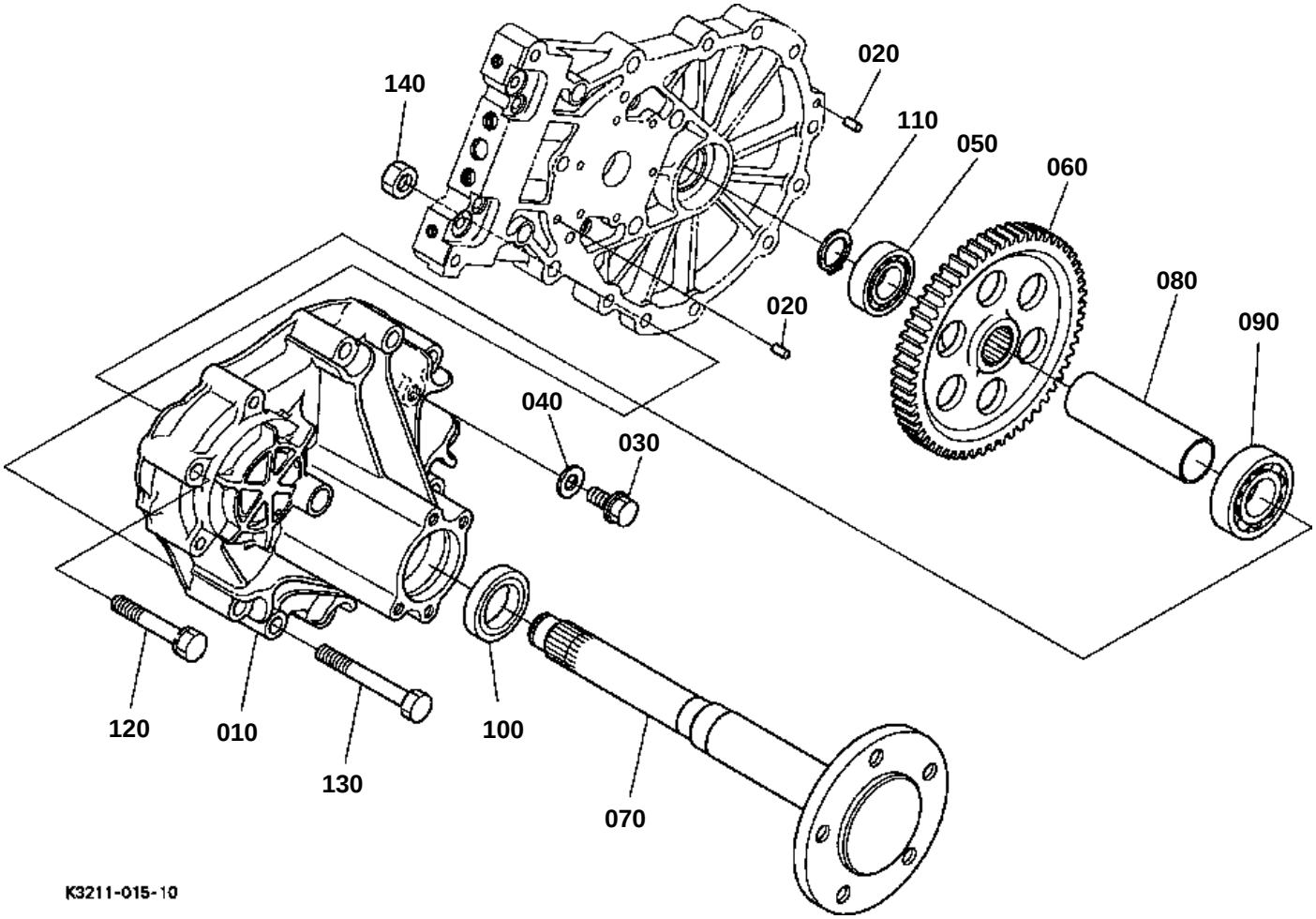
020
140
110
050
060
080
020
090
040
030
120
010
100
130
070
K3211-015-10

↔ Interchangeable; ≠ not interchangeable; ← new for old; → old for new

REF.No	Part No.	Description	Q'ty	S.No.	I/C	REMARKS	Weight (kgf)	Weight (lb)
010	K3211-17240	HAUSING AXLE	1				2.2	4.84
020	05012-00612	PIN STRAIGHT	2				0.003	0.0066
030	01774-51212	BOLT FLANGE	2				0.028	0.0616
040	04717-01200	WASHER WITH RUBBER	2				0.002	0.0044
050	PL501-12190	BEARING	1				0.131	0.2882
060	K3211-17380	GEAR	1				1.74	3.828
070	K3211-17150	AXLE	1				3.46	7.612
080	K3211-17390	COLLAR AXLE	1				0.14	0.308
090	PL501-12230	BEARING	1				0.196	0.4312
100	09503-55511	SEAL OIL	1				0.023	0.0506
110	04612-00250	CIR CLIP EXTERNAL	1				0.002	0.0044
120	01133-51065	BOLT	7				0.043	0.0946
130	01133-51090	BOLT	3				0.056	0.1232
140	02118-50100	NUT	3				0.005	0.011

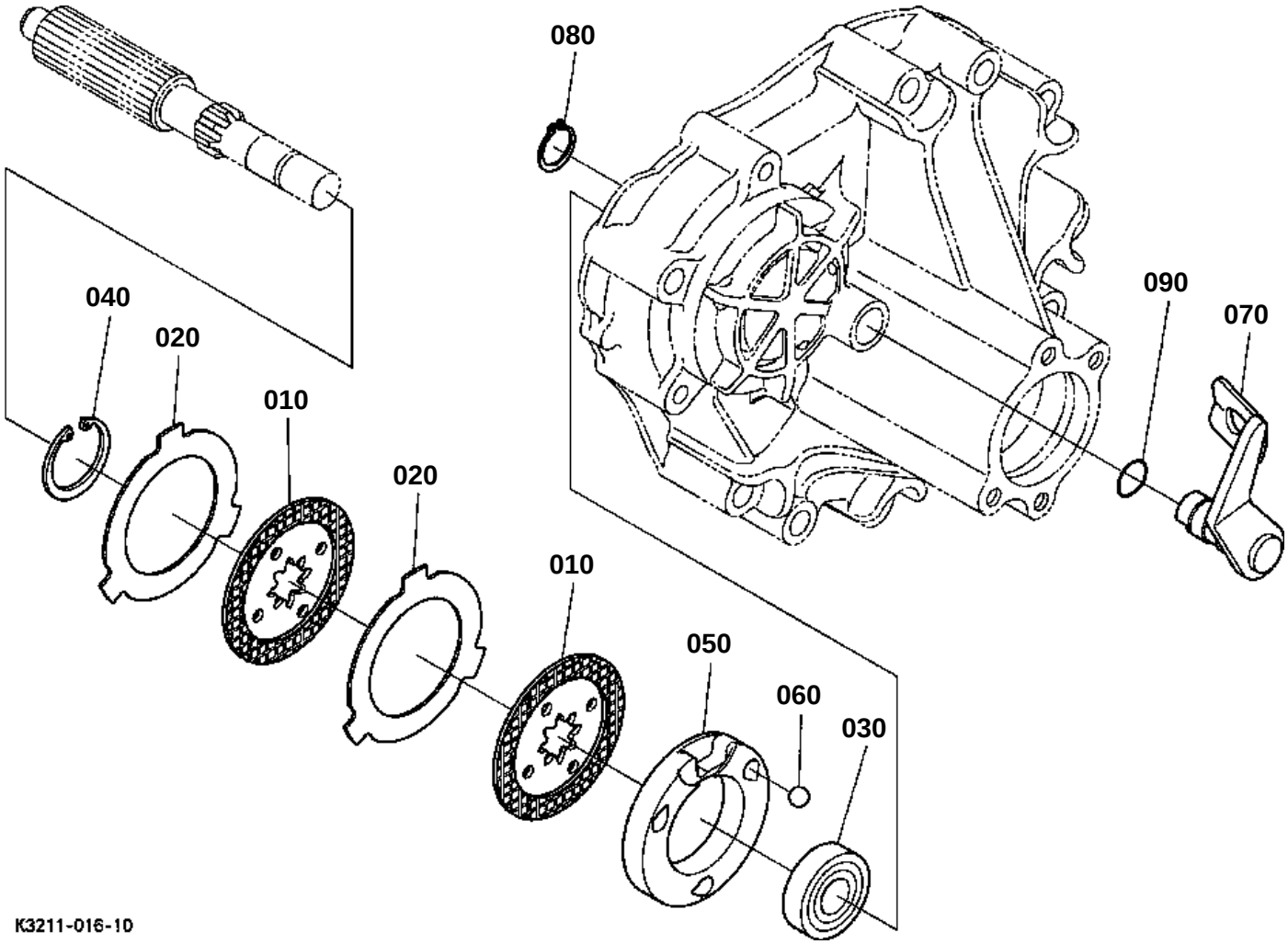
080
040
020
010
020
010
050
060
030
090
070
K3211-016-10

↔ Interchangeable; ≠ not interchangeable; ← new for old; → old for new

REF.No	Part No.	Description	Q'ty	S.No.	I/C	REMARKS	Weight (kgf)	Weight (lb)
010	K3211-14610	DISK BRAKE	2				0.06	0.132
020	K3211-14620	PLATE FRICTION	2				0.03	0.066
030	PL501-12130	BEARING	1				0.08	0.176
040	04611-00880	CIR CLIP INTERNAL	1				0.003	0.0066
050	K3211-14652	ACTUATOR-RH	1				0.265	0.583
060	07715-00803	BALL	3				0.004	0.0088
070	K3211-14662	ARM BRAKE RH	1				0.2	0.44
080	04612-00180	CIR CLIP EXTERNAL	1				0.001	0.0022
090	04817-00140	O RING	1				0.001	0.0022

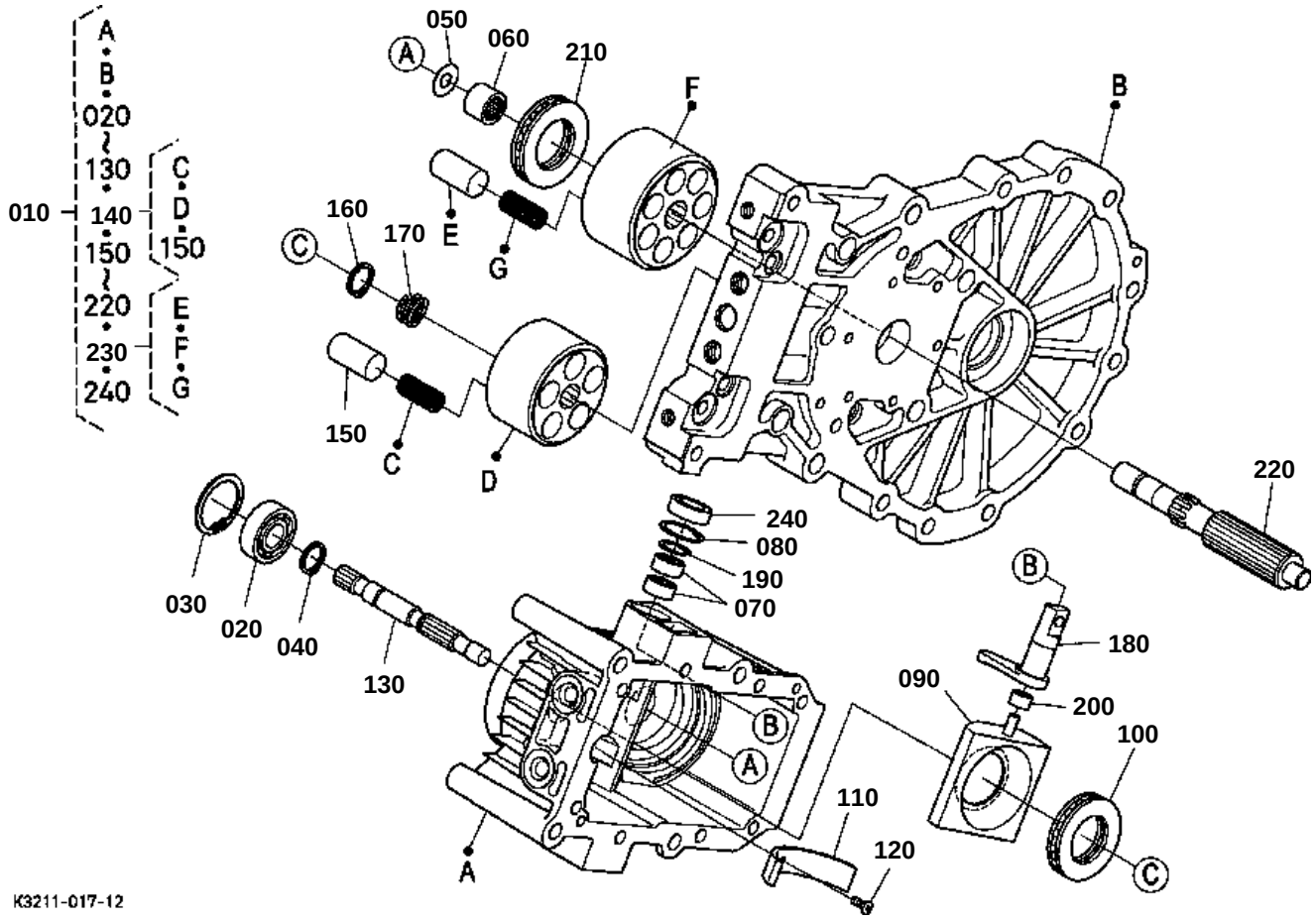
010
A
B
020
130
140
150
220
230
240
C
D
150
E
F
G
050
060
210
F
B
160
170
E
G
C
150
C
D
220
240
080
190
070
030
020
040
130
B
180
090
200
100
B
A
110
120
A
C
K3211-017-12

↔ Interchangeable; ≠ not interchangeable; ← new for old; → old for new

REF.No	Part No.	Description	Q'ty	S.No.	I/C	REMARKS	Weight (kgf)	Weight (lb)
010	K3211-13002	AXLE ASSY HST-LH	1				0	0
020	K3211-11650	BEARING	1				0.08	0.176
030	04611-00420	CIR CLIP INTERNAL	1				0.006	0.0132
040	04612-00150	CIR CLIP EXTERNAL	1				0.001	0.0022
050	6A110-35240	COLLAR	1				0.002	0.0044
060	6A110-35122	BEARING NEEDLE	1				0.023	0.0506
070	08101-06902	BEARING BALL	2				0.007	0.0154
080	04611-00280	CIR CLIP INTERNAL	1				0.002	0.0044
090	K7021-39112	SWASH PLATE	1				0.24	0.528
100	K7021-38120	BEARING THRUST BALL	1				0.1	0.22
110	K7021-39220	BEARING CRADLE	2				0.015	0.033
120	03056-50308	SCREW CSK-HD	2				0.001	0.0022
130	K3211-11140	SHAFT	1				0.19	0.418
140	K7021-38300	ASSY BLOCK CYL.(P)	1				0.61	1.342
150	K7021-39330	SPRING PISTON	5				0.006	0.0132
160	K7021-39140	CIR CLIP EXTERNAL	1				0.001	0.0022
170	K7021-39150	SPRING CYP	1				0.005	0.011
180	K2511-14520	SHAFT	1				0.1	0.22
190	K7021-39140	CIR CLIP EXTERNAL	1				0.001	0.0022
200	K7021-38170	BLOCK SWASH PLATE	1				0.005	0.011
210	5H550-19120	BEARING THRUST BALL	1				0.22	0.484
220	K3211-11170	SHAFT BRAKE HST-M	1				0.49	1.078
230	5H550-19400	ASSY BLOCK CYL.(M)	1				0.935	2.057
240	31381-76390	SEAL OIL	1				0.01	0.022

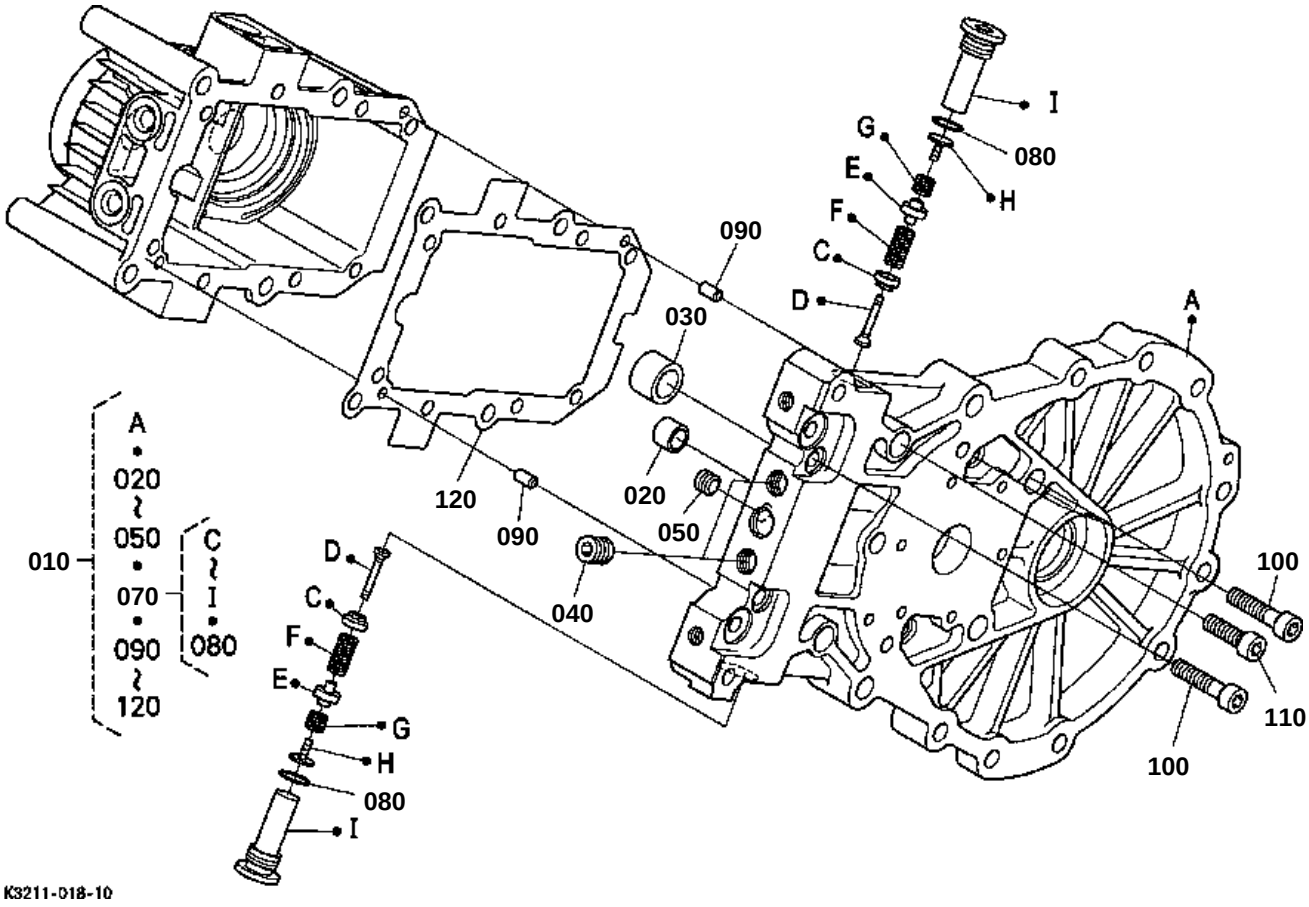
I
G
080
E
H
F
090
C
D
A
030
A
020
050
010
C
070
I
080
090
120
120
090
020
050
040
D
C
F
E
G
H
080
I
100
110
100
K3211-018-10

↔ Interchangeable; ≠ not interchangeable; ← new for old; → old for new

REF.No	Part No.	Description	Q'ty	S.No.	I/C	REMARKS	Weight (kgf)	Weight (lb)
010	K3211-11500	ASSY COVER PORTBLOCK	1				0	0
020	K7021-38020	BUSH	1				0.005	0.011
030	K3211-38020	BUSH	1				0.02	0.044
040	K7001-39620	PLUG	2				0.005	0.011
050	K7001-39610	PLUG	1				0.01	0.022
060	99999-99999	BLANK	0				0	0
070	K3211-11530	ASSY VALVE RELIEF	2				0.04	0.088
080	04817-00110	O RING	2				0.001	0.0022
090	05012-00612	PIN STRAIGHT	2				0.003	0.0066
100	01311-10835	BOLT HEX-SOC-HD	6				0.02	0.044
110	01311-10830	BOLT HEX-SOC-HD	2				0.015	0.033
120	K3211-39040	GASKET	1				0.004	0.0088

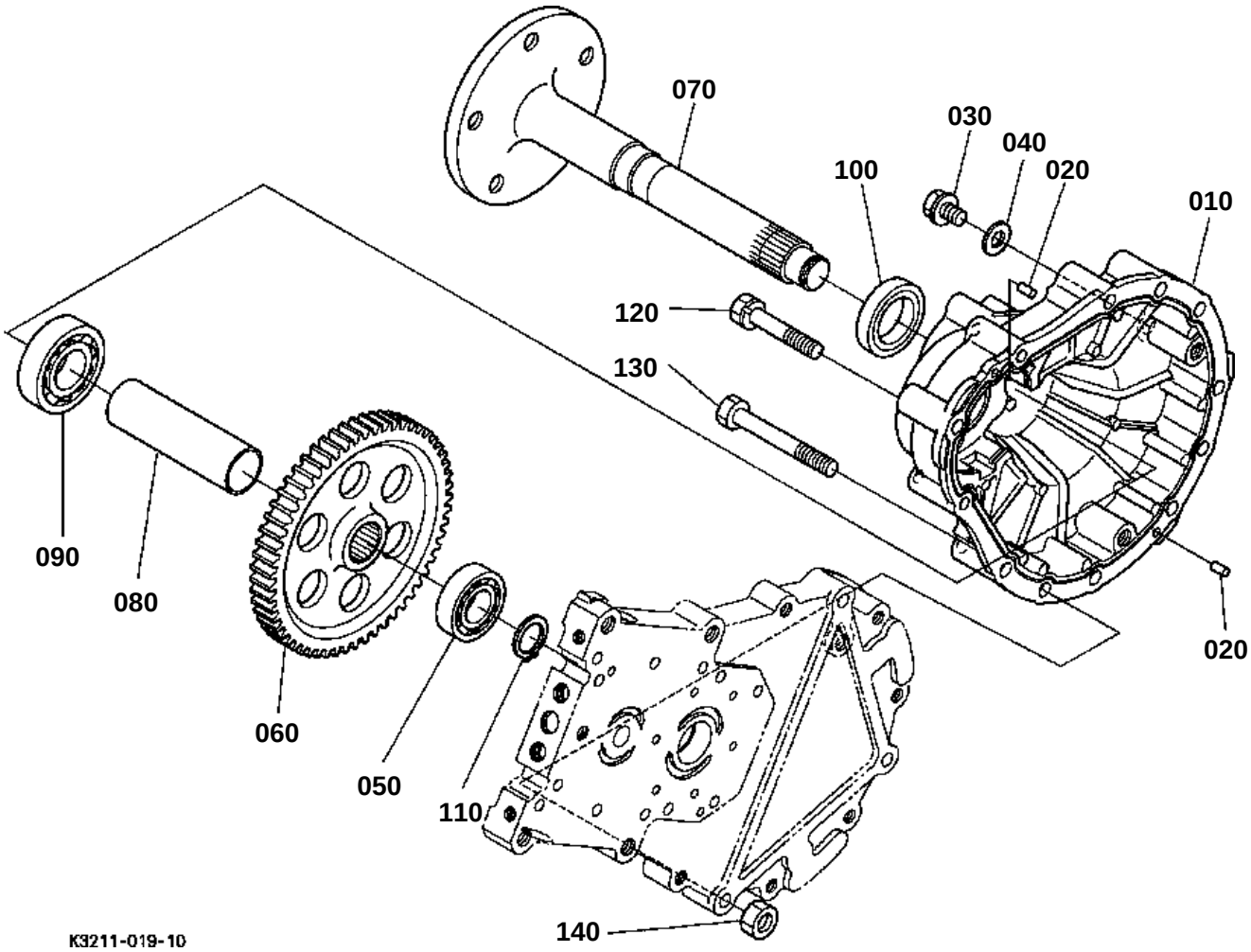
070
030
040
020
100
010
120
130
090
080
060
050
110
020
140
K3211-019-10

↔ Interchangeable; ≠ not interchangeable; ← new for old; → old for new

REF.No	Part No.	Description	Q'ty	S.No.	I/C	REMARKS	Weight (kgf)	Weight (lb)
010	K3211-17240	HAUSING AXLE	1				2.2	4.84
020	05012-00612	PIN STRAIGHT	2				0.003	0.0066
030	01774-51212	BOLT FLANGE	2				0.028	0.0616
040	04717-01200	WASHER WITH RUBBER	2				0.002	0.0044
050	PL501-12190	BEARING	1				0.131	0.2882
060	K3211-17380	GEAR	1				1.74	3.828
070	K3211-17150	AXLE	1				3.46	7.612
080	K3211-17390	COLLAR AXLE	1				0.14	0.308
090	PL501-12230	BEARING	1				0.196	0.4312
100	09503-55511	SEAL OIL	1				0.023	0.0506
110	04612-00250	CIR CLIP EXTERNAL	1				0.002	0.0044
120	01133-51065	BOLT	7				0.043	0.0946
130	01133-51090	BOLT	3				0.056	0.1232
140	02118-50100	NUT	3				0.005	0.011

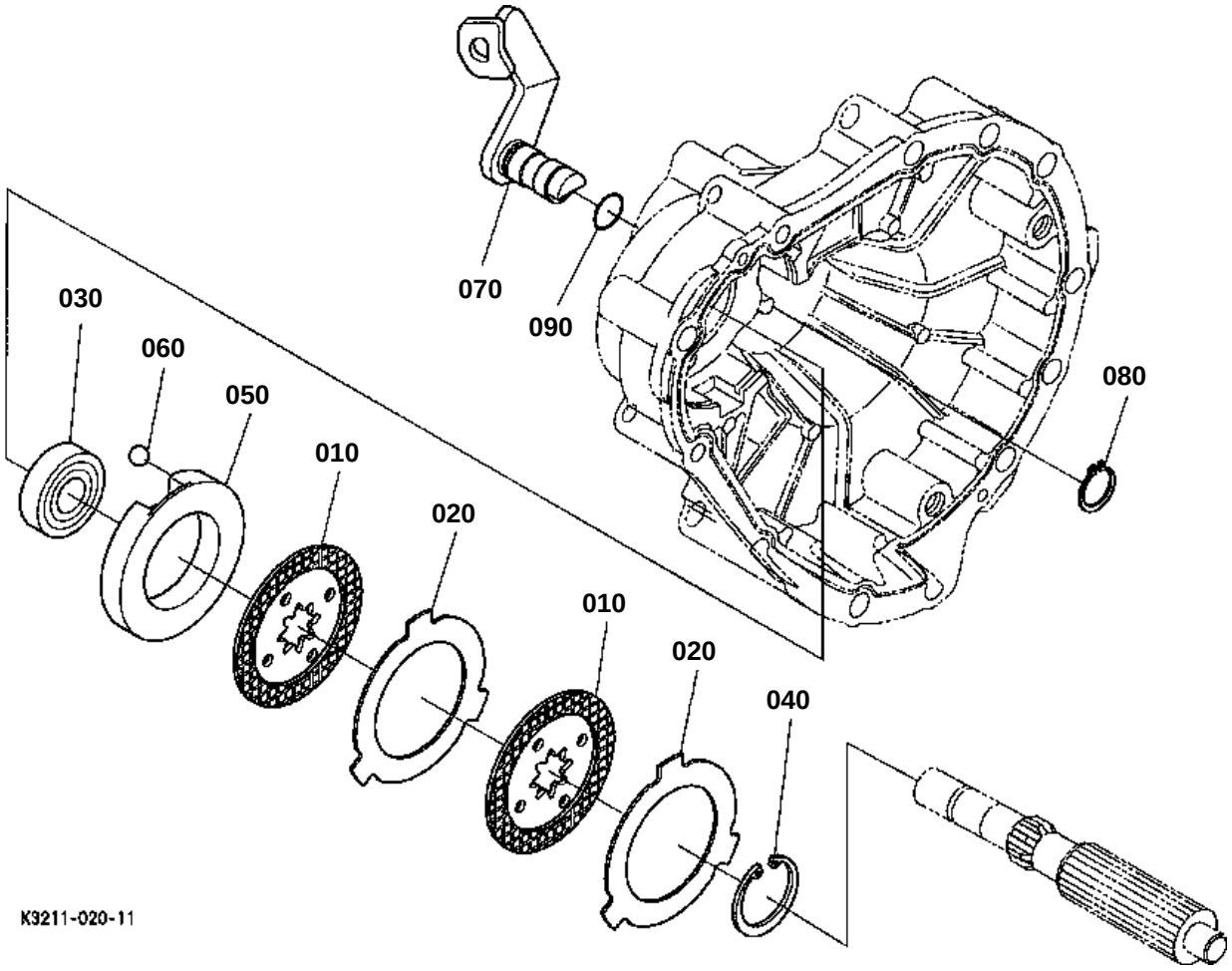
070
090
030
060
050
010
020
010
020
040
080
K3211-020-11

↔ Interchangeable; ≠ not interchangeable; ← new for old; → old for new

REF.No	Part No.	Description	Q'ty	S.No.	I/C	REMARKS	Weight (kgf)	Weight (lb)
010	K3211-14610	DISK BRAKE	2				0.06	0.132
020	K3211-14620	PLATE FRICTION	2				0.03	0.066
030	PL501-12130	BEARING	1				0.08	0.176
040	04611-00880	CIR CLIP INTERNAL	1				0.003	0.0066
050	K3211-14642	ACTUATOR-LH	1				0.265	0.583
060	07715-00803	BALL	3				0.004	0.0088
070	K3211-14672	ARM BRAKE LH	1				0.2	0.44
080	04612-00180	CIR CLIP EXTERNAL	1				0.001	0.0022
090	04817-00140	O RING	1				0.001	0.0022

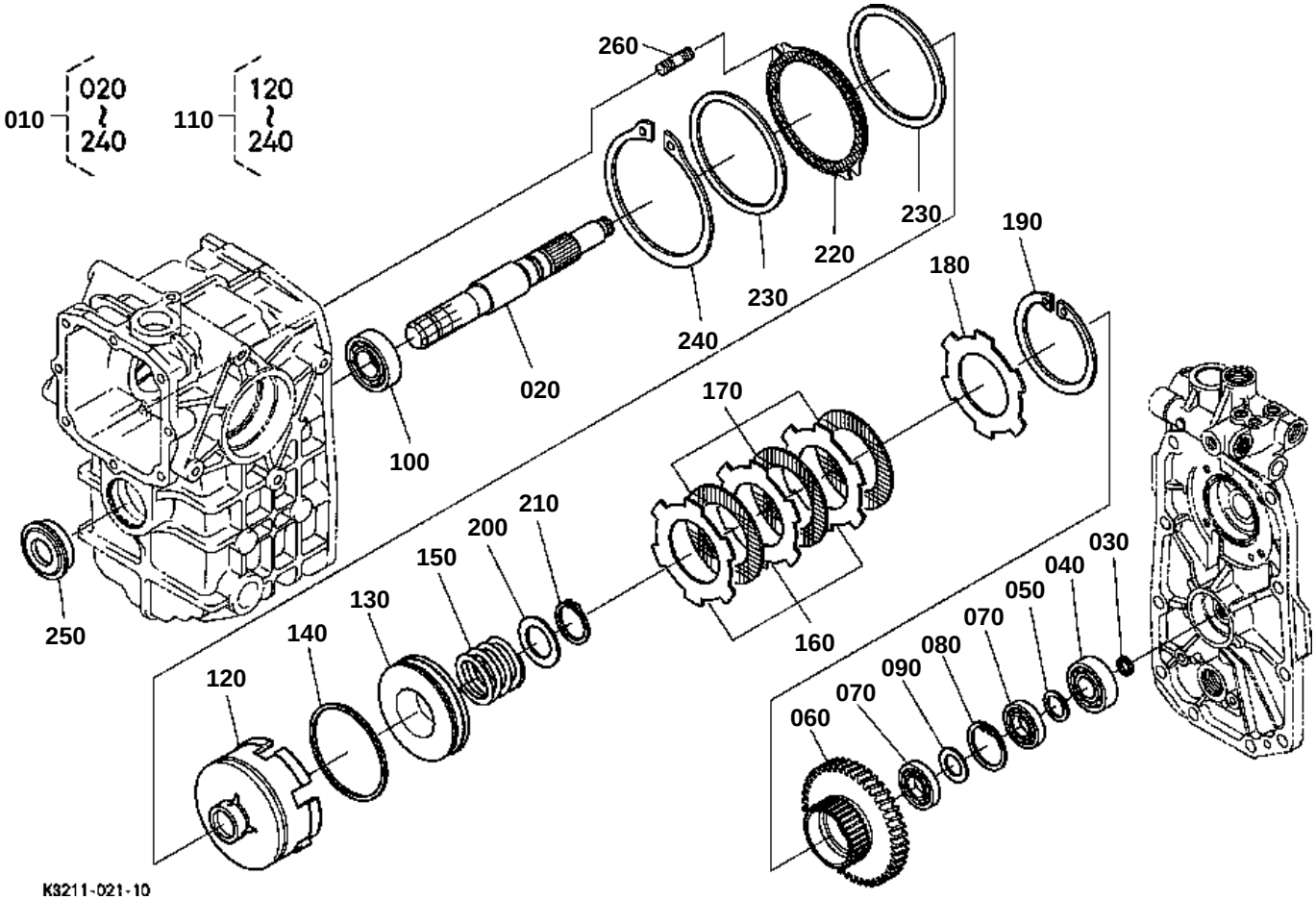
010
020
~
240
110
120
~
240
260
230
220
230
240
190
180
020
100
170
210
200
150
130
140
120
250
160
030
040
050
070
080
090
070
060
K3211-021-10

CLUTCH SHAFT

↔ Interchangeable; ≠ not interchangeable; ← new for old; → old for new

REF.No	Part No.	Description	Q'ty	S.No.	I/C	REMARKS	Weight (kgf)	Weight (lb)
010	K3211-14200	ASSY SHAFT CLUTCH	1				3.55	7.81
020	K3211-14430	SHAFT CLUTCH	1				0.82	1.804
030	37410-75320	RING SEAL	1				0.01	0.022
040	PL501-12160	BEARING	1				0.1	0.22
050	50770-12180	COLLAR THRUST	1				0.003	0.0066
060	K3211-14420	GEAR	1				1.13	2.486
070	08101-16004	BEARING BALL	2				0.05	0.11
080	04611-00420	CIR CLIP INTERNAL	1				0.006	0.0132
090	61361-14330	COLLAR	1				0.007	0.0154
100	PL501-12190	BEARING	1				0.131	0.2882
110	K3211-14810	ASSY CLUTCH	1				1.24	2.728
120	K3211-14820	CASE CLUTCH	1				0.35	0.77
130	K3211-14830	PISTON	1				0.17	0.374
140	K3211-14840	RING SEAL	2				0.004	0.0088
150	K3211-14850	SPRING	1				0.07	0.154
160	K3211-14860	PLATE SEPARATOR	3				0.05	0.11
170	K3211-14870	DISK CLUTCH	3				0.04	0.088
180	K3211-14880	PLATE BACKING	1				0.12	0.264
190	K3211-14890	CIRCLIP INTERNAL	1				0.04	0.088
200	K3211-14900	WASHER PLAIN	1				0.013	0.0286
210	K3211-14910	CIR-CLIP EXTERNAL	1				0.002	0.0044
220	K3211-14920	DISK BRAKE	1				0.04	0.088
230	K3211-14930	PLATE BRAKE	2				0.004	0.0088
240	K3211-14940	CIR-CLIP EXTERNAL	1				0.027	0.0594
250	44512-23970	SEAL OIL	1				0.049	0.1078
260	01555-51040	STUD	2				0.17	0.374

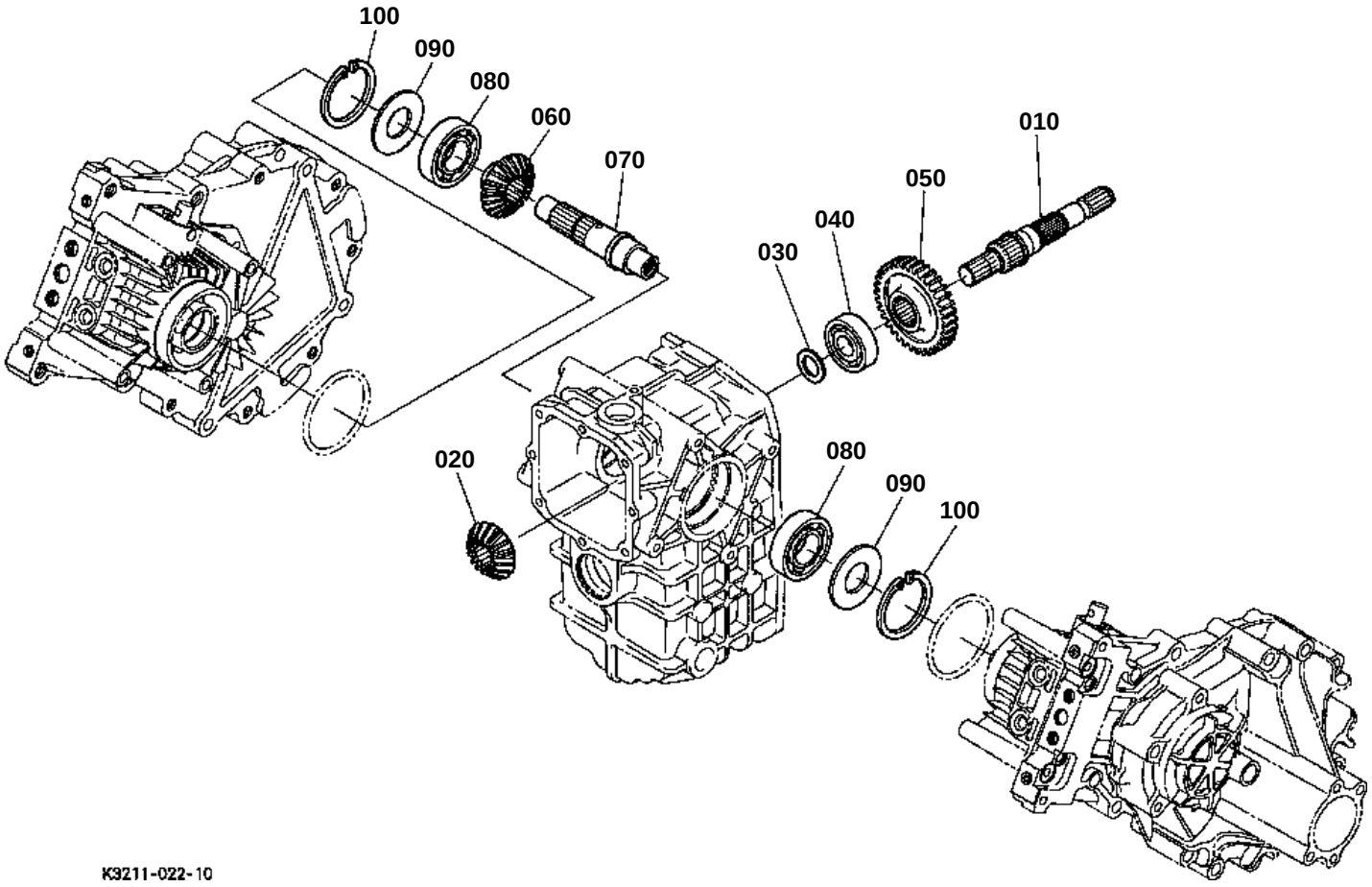
100
090
080
060
070
010
050
040
030
020
080
090
100
K3211-022-10

INPUT SHAFT

↔ Interchangeable; ≠ not interchangeable; ← new for old; → old for new

REF.No	Part No.	Description	Q'ty	S.No.	I/C	REMARKS	Weight (kgf)	Weight (lb)
010	K3211-12210	SHAFT INPUT	1				0.51	1.122
020	K3111-12510	GEAR SPIRAL	1				0.19	0.418
030	13642-16610	SHIM	1			0.20mm	0.001	0.0022
030	13962-16650	SHIM	1			0.40mm	0.002	0.0044
030	13962-16630	SHIM	1			0.30mm	0.001	0.0022
040	PL501-12170	BEARING	1				0.15	0.33
050	K3111-12310	GEAR	1			34T	0.5	1.1
060	K3111-12410	GEAR SPIRAL	1			19T	0.23	0.506
070	K3211-12530	SHAFT JOINT	1				0.36	0.792
080	PL501-12230	BEARING	2				0.196	0.4312
090	66621-15240	SHIM DIFF.GEAR SHAFT	2			0.20mm	0.001	0.0022
090	67211-14990	SHIM DIFF.GEAR SHAFT	2			0.30mm	0.002	0.0044
100	04611-00620	CIR CLIP INTERNAL	2				0.011	0.0242

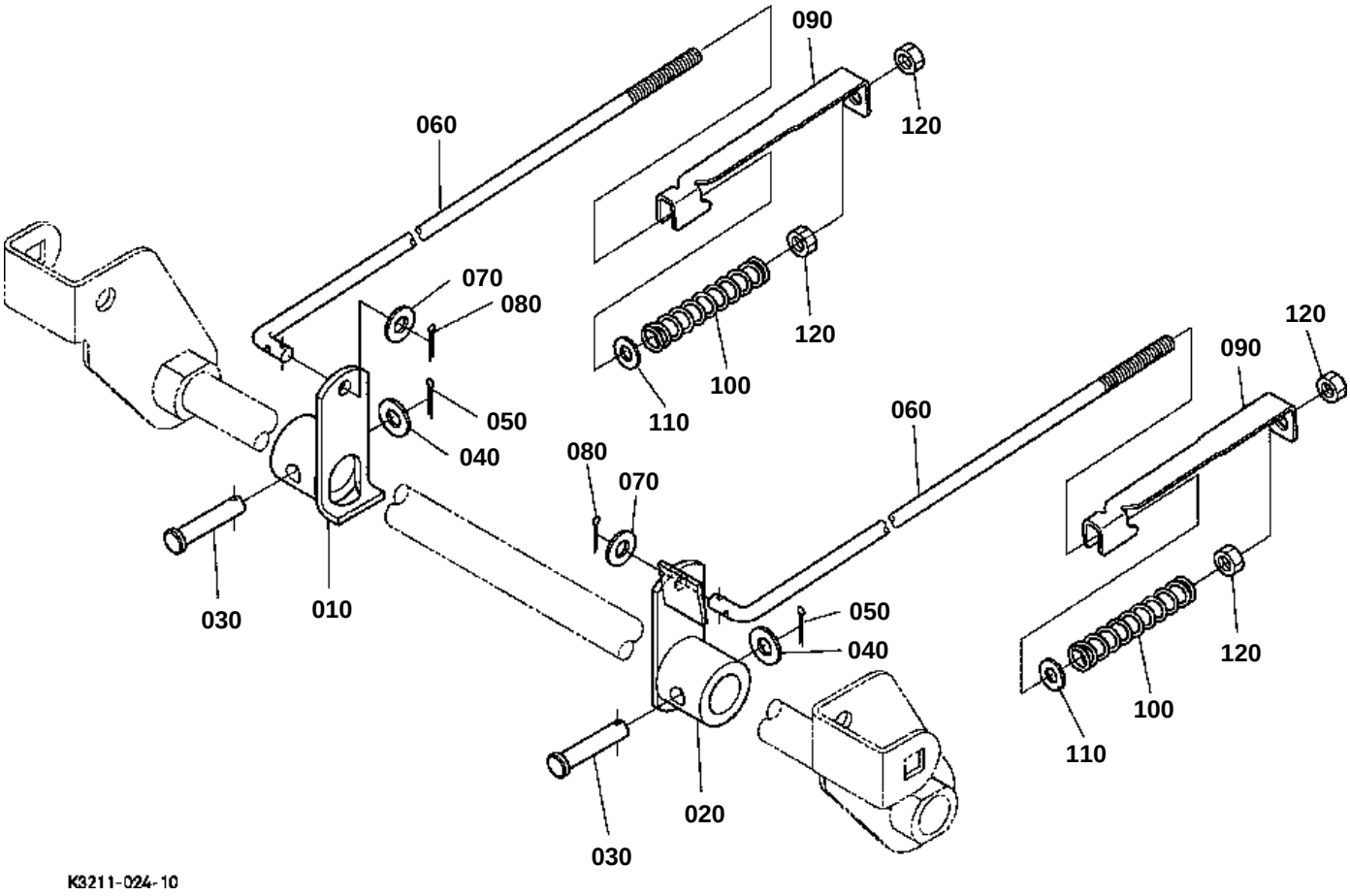
090
120
060
070
080
120
100
110
050
040
080
070
060
120
090
030
010
050
040
120
100
110
020
030
K3211-024-10

BRAKE ROD

↔ Interchangeable; ≠ not interchangeable; ← new for old; → old for new

REF.No	Part No.	Description	Q'ty	S.No.	I/C	REMARKS	Weight (kgf)	Weight (lb)
010	K3211-43272	ARM BRAKE RH	1				0.5	1.1
020	K3211-43282	ARM BRAKE LH	1				0.53	1.166
030	75599-51440	PIN CLEVIS	2				0.044	0.0968
040	0Y401-50070	WASHER PLAIN	2				0.043	0.0946
050	05511-50425	PIN SPLIT	2				0.003	0.0066
060	K3211-43130	ROD BRAKE	2				0	0
070	04013-60100	WASHER PLAIN	2				0.003	0.0066
080	05511-50320	PIN SPLIT	2				0.002	0.0044
090	K3211-43120	PLATE RETURN	2				0	0
100	K3211-43140	SPRING BRAKE	2				0	0
110	04013-60100	WASHER PLAIN	2				0.003	0.0066
120	02118-50100	NUT	4				0.005	0.011

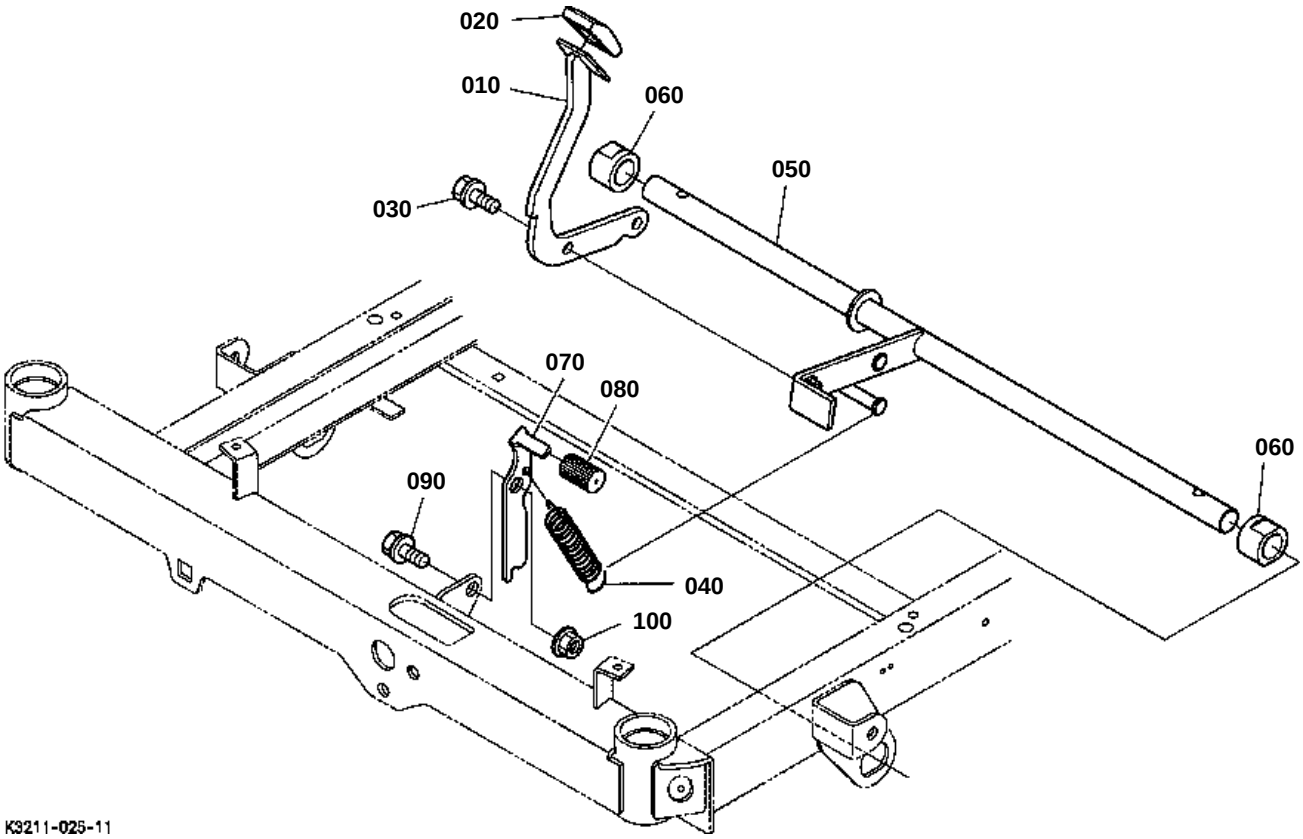
020
010
060
050
030
070
080
060
090
040
100
K3211-025-11

PARKING BRAKE LEVER

↔ Interchangeable; ≠ not interchangeable; ← new for old; → old for new

REF.No	Part No.	Description	Q'ty	S.No.	I/C	REMARKS	Weight (kgf)	Weight (lb)
010	K3211-43250	PEDAL BRAKE	1				0	0
020	K3211-43260	COVER BRAKE PEDAL	1				0	0
030	01133-51230	BOLT	1				0.04	0.088
040	K3211-43160	SPRING PEDAL RETURN	1				0	0
050	K3211-43310	SHAFT BRAKE	1				0	0
060	K2561-43180	BUSH	2				0.099	0.2178
070	K3211-43220	PEDAL PARKING LOCK	1				0	0
080	K3211-43210	COVER PARKING LOCK	1				0	0
090	K1122-43280	BOLT SHOULDER	1				0.044	0.0968
100	K1122-91960	NUT FLANGE	1				0.012	0.0264

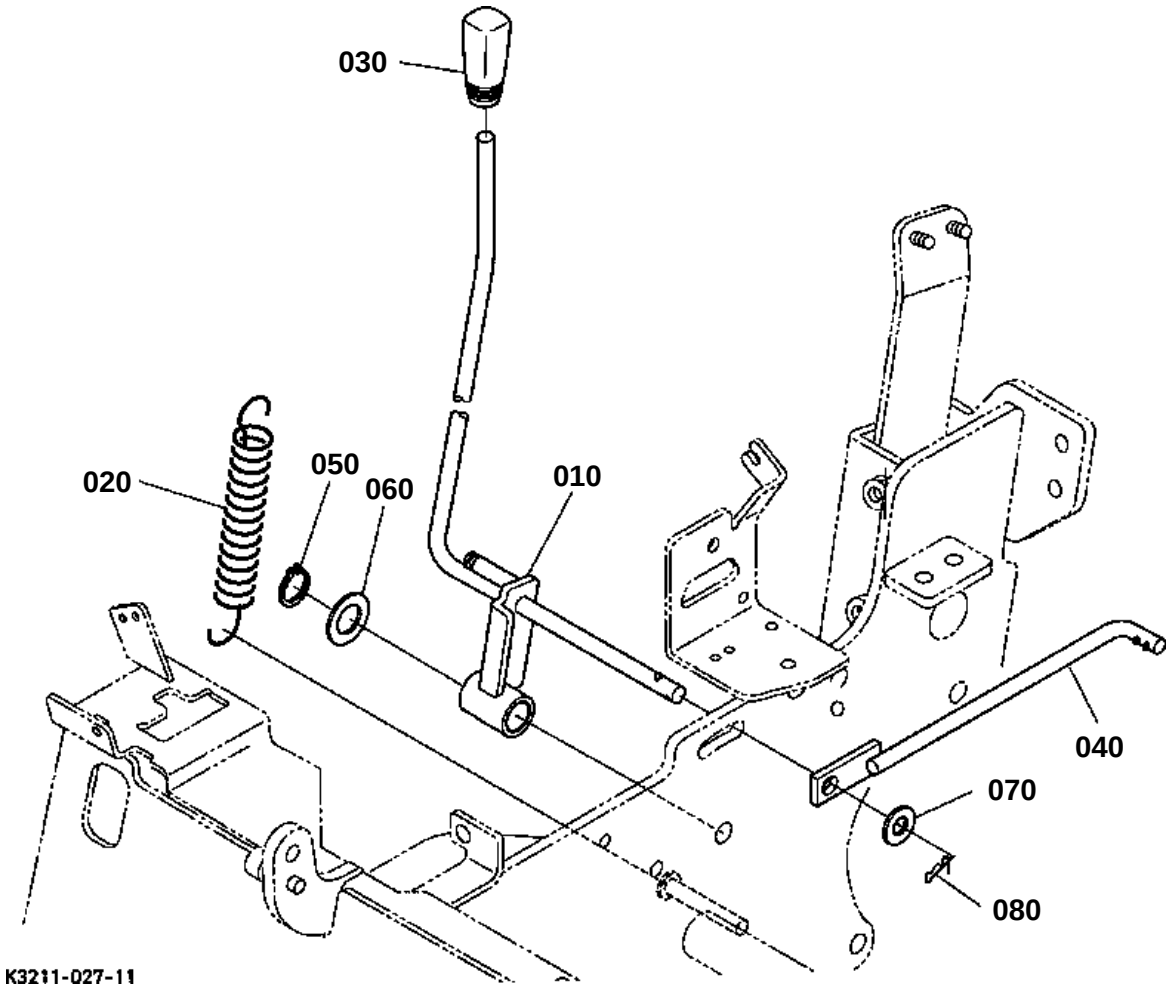
030
020
050
060
010
040
070
080
K3211-027-11

PTO GEAR SHIFT LEVER

↔ Interchangeable; ≠ not interchangeable; ← new for old; → old for new

REF.No	Part No.	Description	Q'ty	S.No.	I/C	REMARKS	Weight (kgf)	Weight (lb)
010	K3211-46110	LEVER PTO	1				0	0
020	K3211-46250	SPRING	1				0	0
030	K1310-36350	GRIP LEVER	1				0.026	0.0572
040	K3211-46130	ROD PTO	1				0.1	0.22
050	75599-41519	CIR-CLIP EXTERNAL	1				0.001	0.0022
060	75599-32015	WASHER PLAIN	1				0.01	0.022
070	04013-60100	WASHER PLAIN	1				0.003	0.0066
080	K1211-91130	RUE RING COTTER	1				0.01	0.022

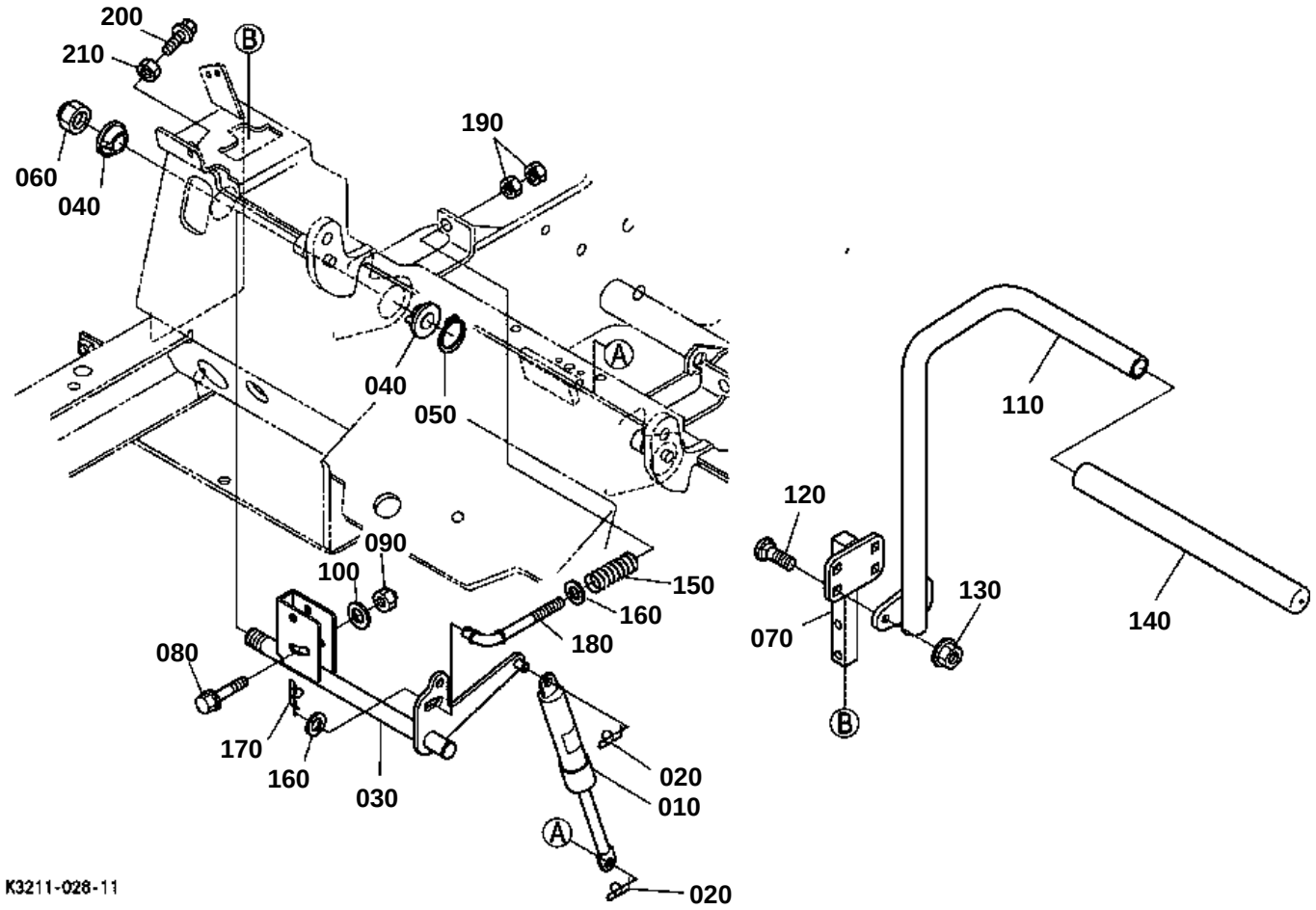
200
210
060
040
190
040
050
090
100
150
160
180
080
170
160
030
020
010
020
110
120
130
140
070
K3211-028-11

SPEED CONTROL LEVER RH

↔ Interchangeable; ≠ not interchangeable; ← new for old; → old for new

REF.No	Part No.	Description	Q'ty	S.No.	I/C	REMARKS	Weight (kgf)	Weight (lb)
010	K3211-42750	DAMPER	1				0	0
020	K1211-91120	RUE RING COTTER	2				0.001	0.0022
030	K3211-42344	ARM SPEED-RH	1				1.02	2.244
040	K3211-42320	BUSHING LEVER	2				0	0
050	04612-00160	CIR CLIP EXTERNAL	1				0.001	0.0022
060	02574-50160	NUT LOCK	1				0.03	0.066
070	K3211-42330	ROD SPEED	1				0.41	0.902
080	K3211-42440	REAMER BOLT	2				0.019	0.0418
090	02556-50080	NUT LOCK	2				0.004	0.0088
100	04013-60080	WASHER PLAIN	2				0.002	0.0044
110	K3211-42360	LEVER SPEED RH	1				0	0
120	01611-50825	BOLT CUP-SQ-NK	2				0.014	0.0308
130	02751-50080	NUT FLANGE	2				0.006	0.0132
140	K3111-42370	GRIP SPEED	1				0.168	0.3696
150	K3111-42220	SPRING SPEED	1				0.03	0.066
160	04013-60100	WASHER PLAIN	2				0.003	0.0066
170	K1211-91130	RUE RING COTTER	1				0.01	0.022
180	K3211-42470	ROD SPEED LIMIT	1				0.06	0.132
190	02118-50100	NUT	2				0.005	0.011
200	01153-50825	BOLT	1				0.012	0.0264
210	02114-50080	NUT	1				0.005	0.011

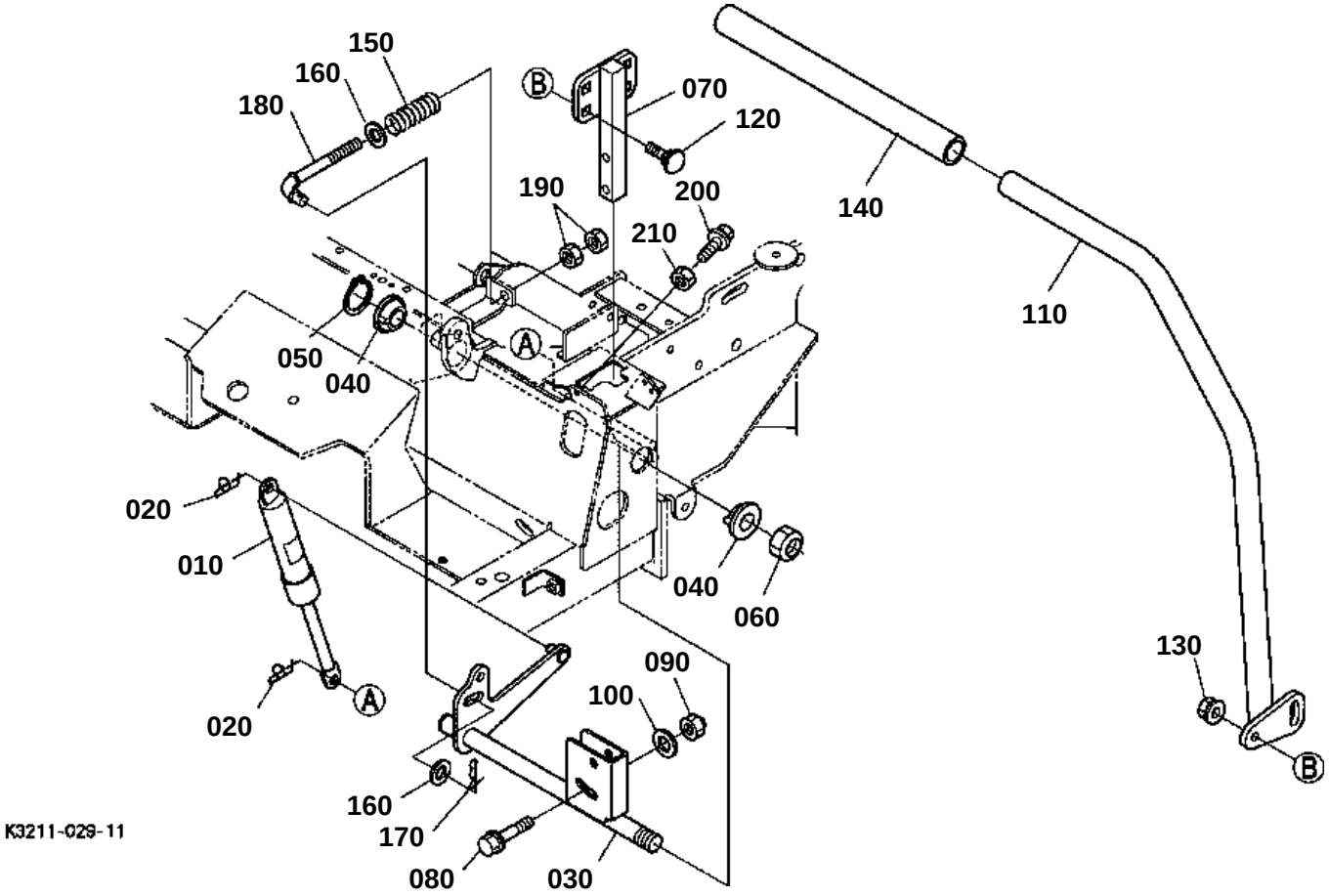
150
160
180
B
070
120
190
200
210
140
110
050
040
A
020
010
040
060
130
090
100
A
020
B
160
170
080
030
K3211-029-11

SPEED CONTROL LEVER LH

↔ Interchangeable; ≠ not interchangeable; ← new for old; → old for new

REF.No	Part No.	Description	Q'ty	S.No.	I/C	REMARKS	Weight (kgf)	Weight (lb)
010	K3211-42750	DAMPER	1				0	0
020	K1211-91120	RUE RING COTTER	2				0.001	0.0022
030	K3211-42354	ARM SPEED-LH	1				1.03	2.266
040	K3211-42320	BUSHING LEVER	2				0	0
050	04612-00160	CIR CLIP EXTERNAL	1				0.001	0.0022
060	02574-50160	NUT LOCK	1				0.03	0.066
070	K3211-42330	ROD SPEED	1				0.41	0.902
080	K3211-42440	REAMER BOLT	2				0.019	0.0418
090	02556-50080	NUT LOCK	2				0.004	0.0088
100	04013-60080	WASHER PLAIN	2				0.002	0.0044
110	K3211-42460	LEVER SPEED LH	1				0	0
120	01611-50825	BOLT CUP-SQ-NK	2				0.014	0.0308
130	02751-50080	NUT FLANGE	2				0.006	0.0132
140	K3111-42370	GRIP SPEED	1				0.168	0.3696
150	K3111-42220	SPRING SPEED	1				0.03	0.066
160	04013-60100	WASHER PLAIN	2				0.003	0.0066
170	K1211-91130	RUE RING COTTER	1				0.01	0.022
180	K3211-42470	ROD SPEED LIMIT	1				0.06	0.132
190	02118-50100	NUT	2				0.005	0.011
200	01153-50825	BOLT	1				0.012	0.0264
210	02114-50080	NUT	1				0.005	0.011

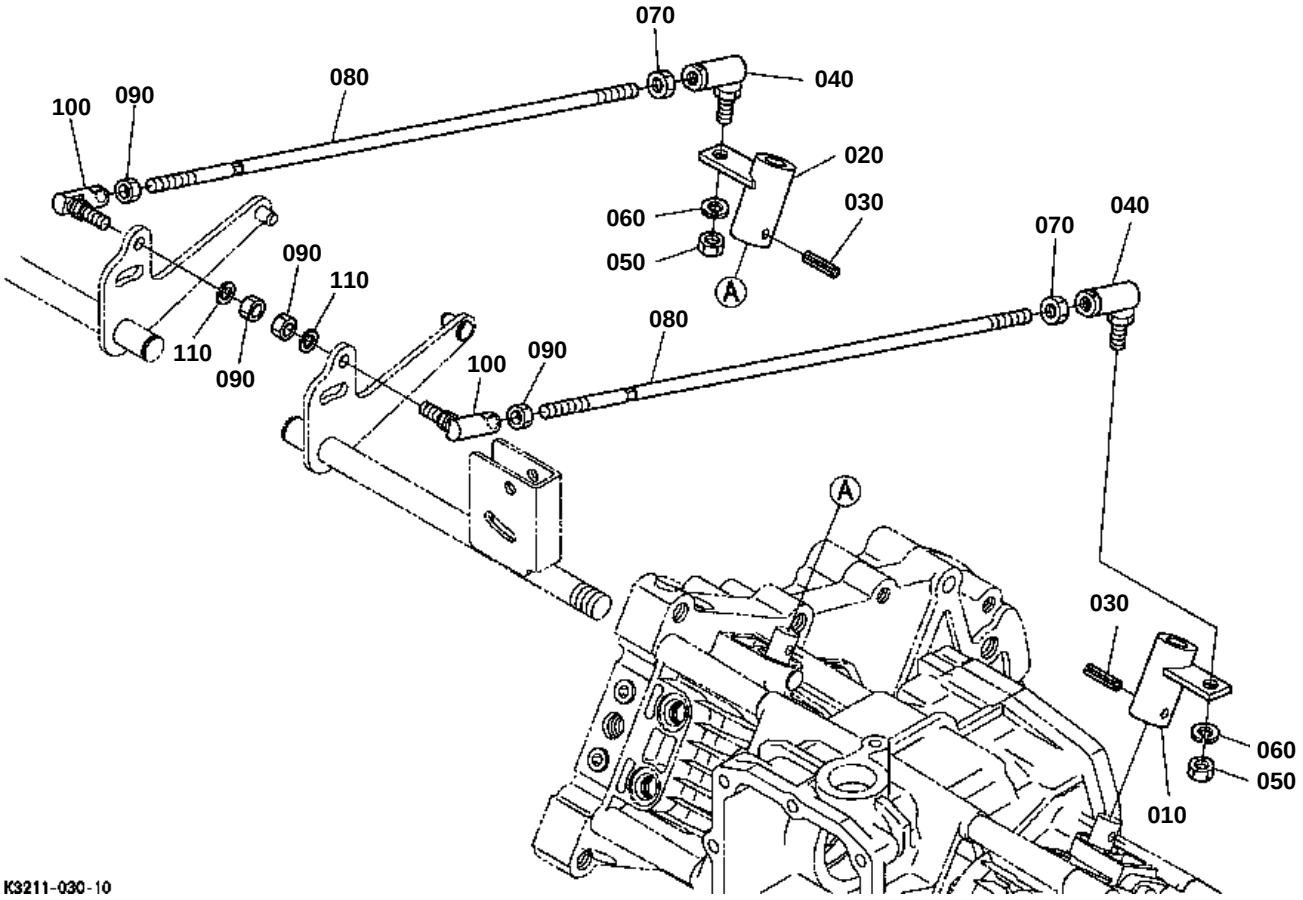
070
040
080
100
090
020
060
030
050
A
070
040
090
110
110
090
080
100
090
A
030
060
050
010
K3211-030-10

SPEED CONTROL ROD 2

↔ Interchangeable; ≠ not interchangeable; ← new for old; → old for new

REF.No	Part No.	Description	Q'ty	S.No.	I/C	REMARKS	Weight (kgf)	Weight (lb)
010	K3211-16210	ARM SPEED LH	1				0.15	0.33
020	K3211-16220	ARM SPEED RH	1				0.15	0.33
030	05411-00630	PIN SPRING	2				0.004	0.0088
040	K3211-42080	ROD END-LH	2				0	0
050	75599-31022	NUT	2				0.015	0.033
060	04512-60080	WASHER SPRING	2				0.002	0.0044
070	K3211-42380	NUT UNF-LH	2				0	0
080	K3211-42770	ROD	2				0	0
090	75599-31022	NUT	4				0.015	0.033
100	K1122-42080	ROD END	2				0.03	0.066
110	04512-60080	WASHER SPRING	2				0.002	0.0044

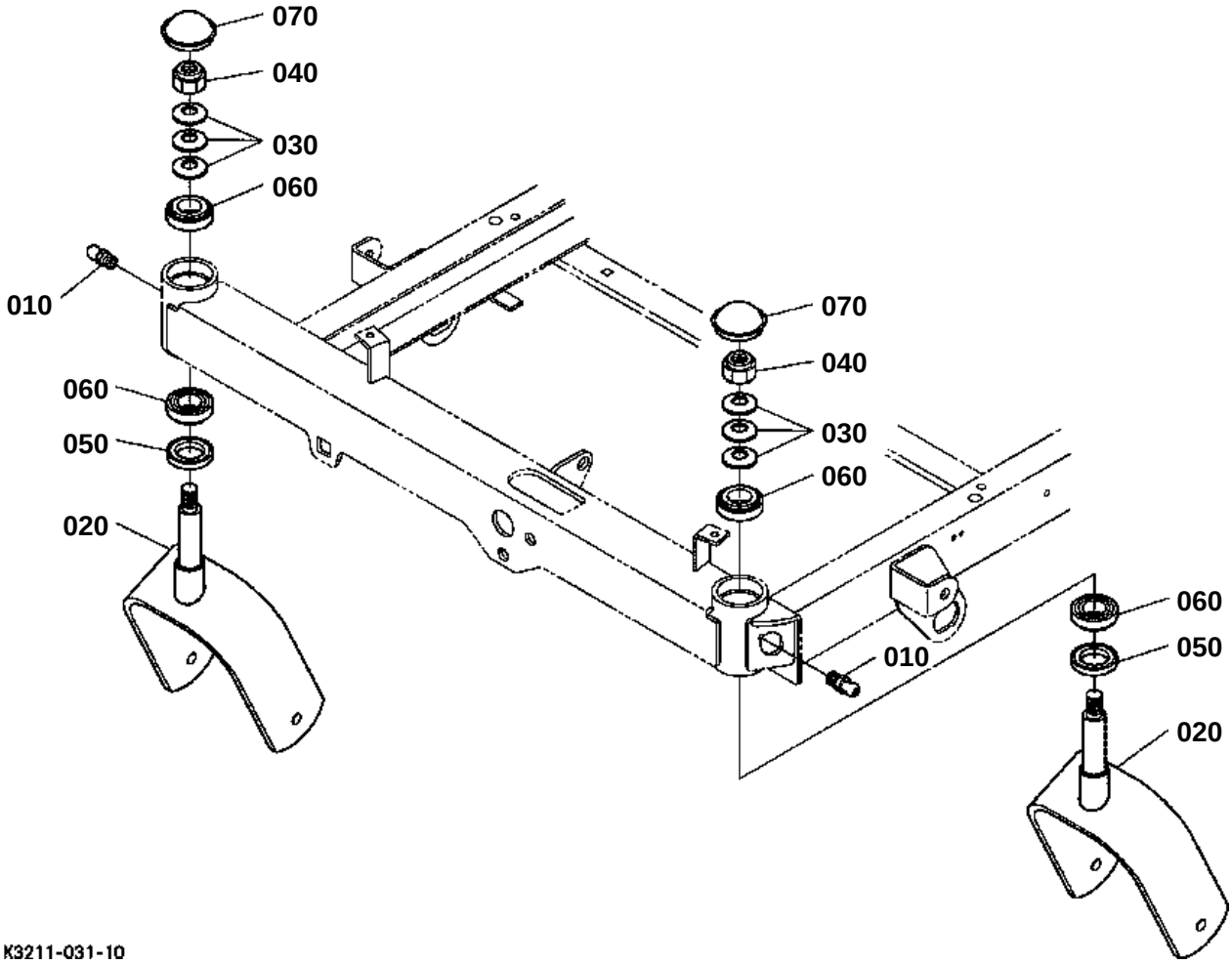
070
040
030
060
010
060
050
020
070
040
030
060
010
060
050
020
K3211-031-10

↔ Interchangeable; ≠ not interchangeable; ← new for old; → old for new

REF.No	Part No.	Description	Q'ty	S.No.	I/C	REMARKS	Weight (kgf)	Weight (lb)
010	K1122-15150	NIPPLE GREASE	2				0.002	0.0044
020	K3211-18124	BRACKET WHEEL	2				39	85.8
030	K3111-18242	SPRING PLATE	6				0.001	0.0022
040	02576-50180	NUT LOCK	2				0.049	0.1078
050	K3211-18050	OIL SEAL(CR)	2				0	0
060	K3211-18070	BEARING(LR)	4				0	0
070	K3211-18460	CAP WHEEL	2				0.022	0.0484

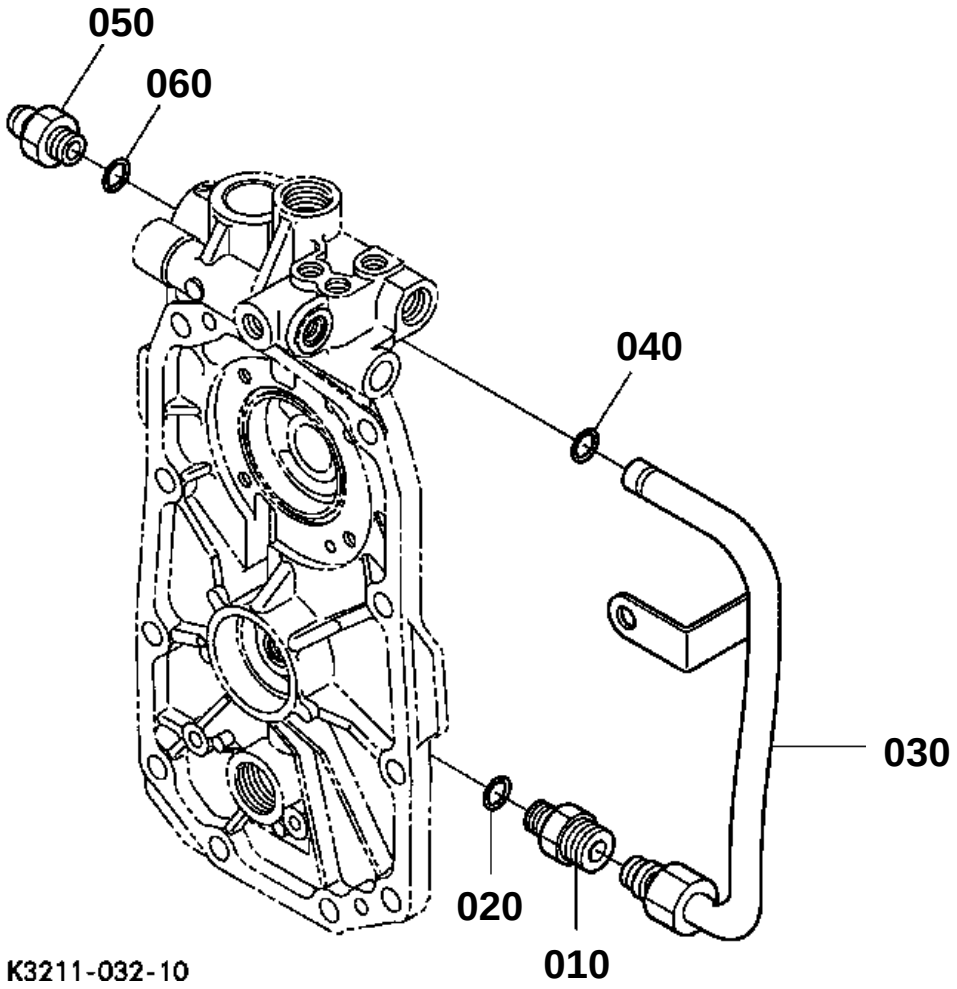
050
060
040
030
020
010
K3211-032-10

PTO HYDRAULIC OIL LINE

↔ Interchangeable; ≠ not interchangeable; ← new for old; → old for new

REF.No	Part No.	Description	Q'ty	S.No.	I/C	REMARKS	Weight (kgf)	Weight (lb)
010	06012-51223	JOINT PIPE	2				0.04	0.088
020	04817-00110	O RING	2				0.001	0.0022
030	K3211-16450	PIPE PTO	1				0.15	0.33
040	04811-10090	O RING	1				0.001	0.0022
050	K3211-36720	ADAPTER	1				0.03	0.066
060	04817-00110	O RING	1				0.001	0.0022

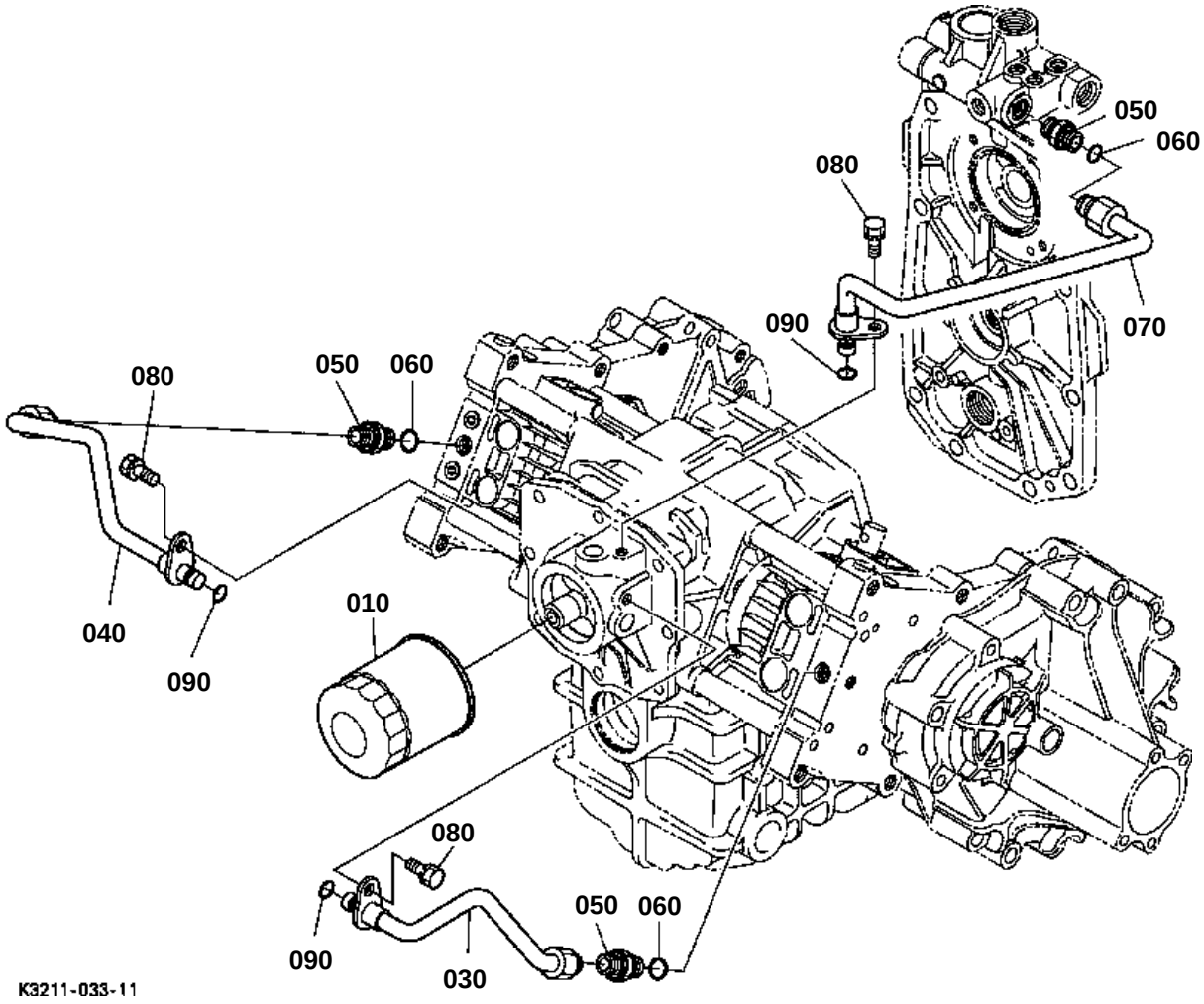
050
060
080
090
070
080
050
060
040
090
010
080
050
060
090
030
K3211-033-11

HYDRAULIC PIPE (HST)

↔ Interchangeable; ≠ not interchangeable; ← new for old; → old for new

REF.No	Part No.	Description	Q'ty	S.No.	I/C	REMARKS	Weight (kgf)	Weight (lb)
010	66021-36060	CARTRIDGE OIL FILTER	1				0.39	0.858
020	99999-99999	BLANK	0				0	0
030	K3211-16410	PIPE HST LH	1				0.12	0.264
040	K3211-16420	PIPE HST RH	1				0.13	0.286
050	06012-51223	JOINT PIPE	2				0.04	0.088
060	04817-00110	O RING	2				0.001	0.0022
070	K3211-16480	PIPE HST CHARGE	1				0.16	0.352
080	01123-60816	BOLT	3				0.01	0.022
090	04811-10090	O RING	3				0.001	0.0022

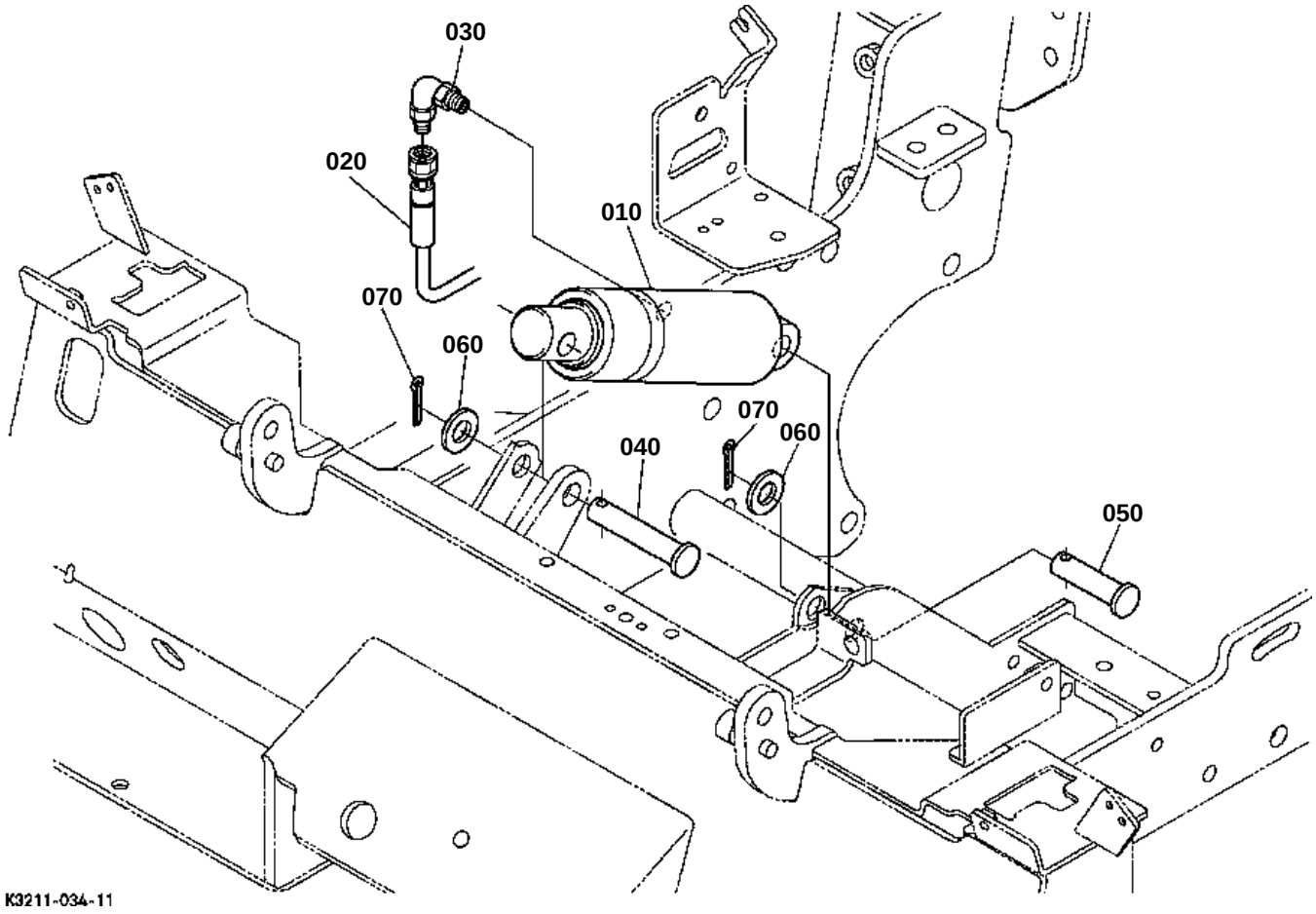
030
020
010
070
060
070
060
040
050
K3211-034-11

LIFT CYLINDER

↔ Interchangeable; ≠ not interchangeable; ← new for old; → old for new

REF.No	Part No.	Description	Q'ty	S.No.	I/C	REMARKS	Weight (kgf)	Weight (lb)
010	K3111-44950	ASSY CYLINDER	1				3.35	7.37
020	K3211-44960	HOSE CYLINDER	1				0	0
030	K1310-63150	ADAPTER	1				0.05	0.11
040	05122-51460	PIN JOINT	1				0.074	0.1628
050	05122-51450	PIN JOINT	1				0.012	0.0264
060	75599-32016	WASHER PLAIN	2				0.009	0.0198
070	75599-53194	PIN COTTER	2				0.001	0.0022

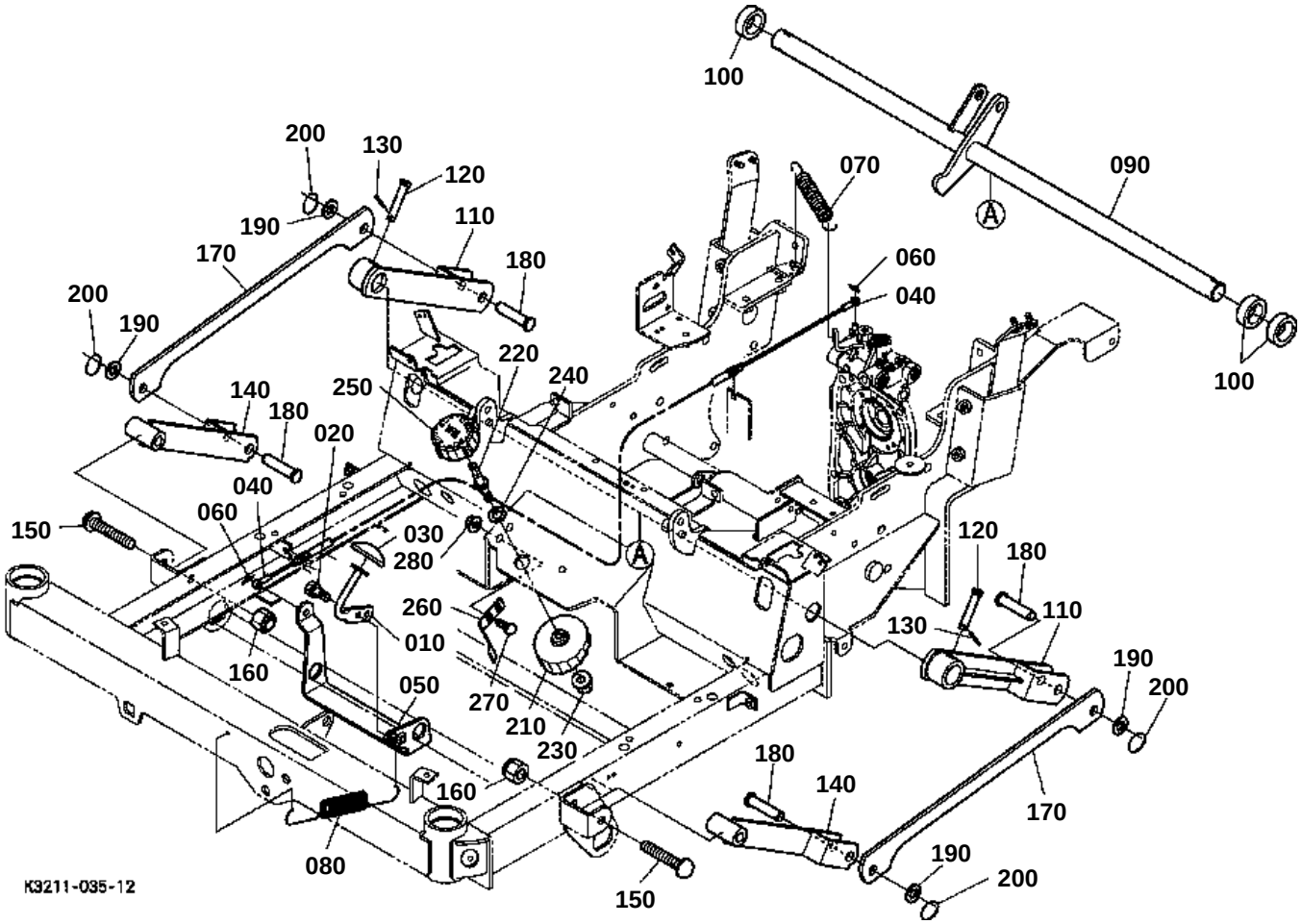
100
200
130
120
190
110
170
180
070
090
A
060
040
200
190
220
240
250
140
180
020
100
040
060
150
030
280
120
180
260
110
130
010
160
190
200
050
270
210
230
180
160
140
170
190
080
200
150
K3211-035-12

MOWER LIFT ARM

↔ Interchangeable; ≠ not interchangeable; ← new for old; → old for new

REF.No	Part No.	Description	Q'ty	S.No.	I/C	REMARKS	Weight (kgf)	Weight (lb)
010	K3211-44110	PEDAL LIFT	1				0.151	0.3322
020	01123-50820	BOLT	2				0.011	0.0242
030	K3211-44120	COVER LIFT PEDAL	1				0	0
040	K3211-36140	WIRE LIFT	1				0	0
050	K3211-44140	BRACKET ARM	1				0	0
060	K1211-91110	RUE RING COTTER	2				0.001	0.0022
070	K3211-44240	SPRING RETURN	1				0	0
080	K3211-44250	SPRING RETURN PEDAL	1				0	0
090	K3211-44312	SHAFT LIFT	1				5.5	12.1
100	K3111-44630	BUSH	3				0.179	0.3938
110	K3211-44614	ARM REAR	2				1.45	3.19
120	05112-51255	PIN JOINT	2				0.052	0.1144
130	75599-53194	PIN COTTER	2				0.001	0.0022
140	K3211-44510	ARM FRONT	2				0	0
150	K1211-91690	BOLT SHORT SQU.NECK	2				0.11	0.242
160	K1211-91930	NUT	2				0.03	0.066
170	K3211-44520	LINK LEVEL	2				0	0
180	K3211-44710	PIN CLEVIS	4				0	0
190	04011-50140	WASHER PLAIN	4				0.007	0.0154
200	K3111-72740	RING SNAP	4				0.01	0.022
210	K3211-44410	CAM	1				0	0
220	K3211-44420	ROD CAM	1				0.05	0.11
230	02771-60100	NUT FLANGE	1				0.01	0.022
240	04013-60120	WASHER PLAIN	1				0.01	0.022
250	K3211-44432	GRIP CAM	1				0.154	0.3388
260	K3211-44443	RETAINER SPRING	1				0.16	0.352
270	K1122-91310	BOLT SHORT	2				0.01	0.022
280	02751-50080	NUT FLANGE	2				0.006	0.0132

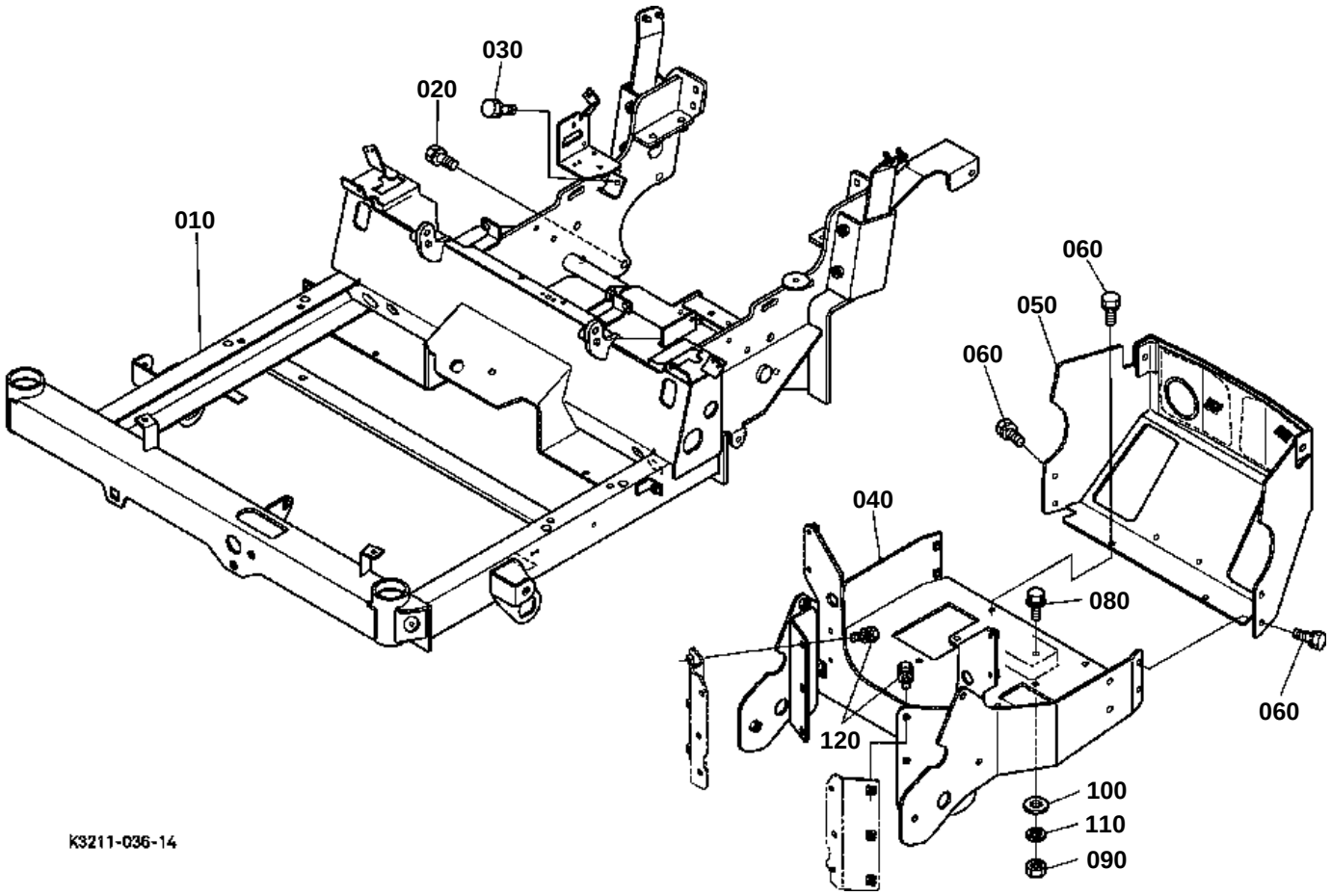
030
020
010
060
050
060
040
080
060
120
100
110
090
K3211-036-14

↔ Interchangeable; ≠ not interchangeable; ← new for old; → old for new

REF.No	Part No.	Description	Q'ty	S.No.	I/C	REMARKS	Weight (kgf)	Weight (lb)
010	K3211-95130	KIT FRAME COMP	1				0	0
020	01133-51235	BOLT	8				0.043	0.0946
030	01135-61025	BOLT	2				0.04	0.088
050	K3211-95110	KIT FRAME REAR	1				0	0
060	01123-50820	BOLT	6				0.011	0.0242
070	99999-99999	BLANK	0				0	0
080	01754-50840	BOLT FLANGE	4				0.02	0.044
090	02156-50080	NUT	4				0.004	0.0088
100	04013-60080	WASHER PLAIN	4				0.002	0.0044
110	04512-60080	WASHER SPRING	4				0.002	0.0044
120	01135-61025	BOLT	6				0.04	0.088

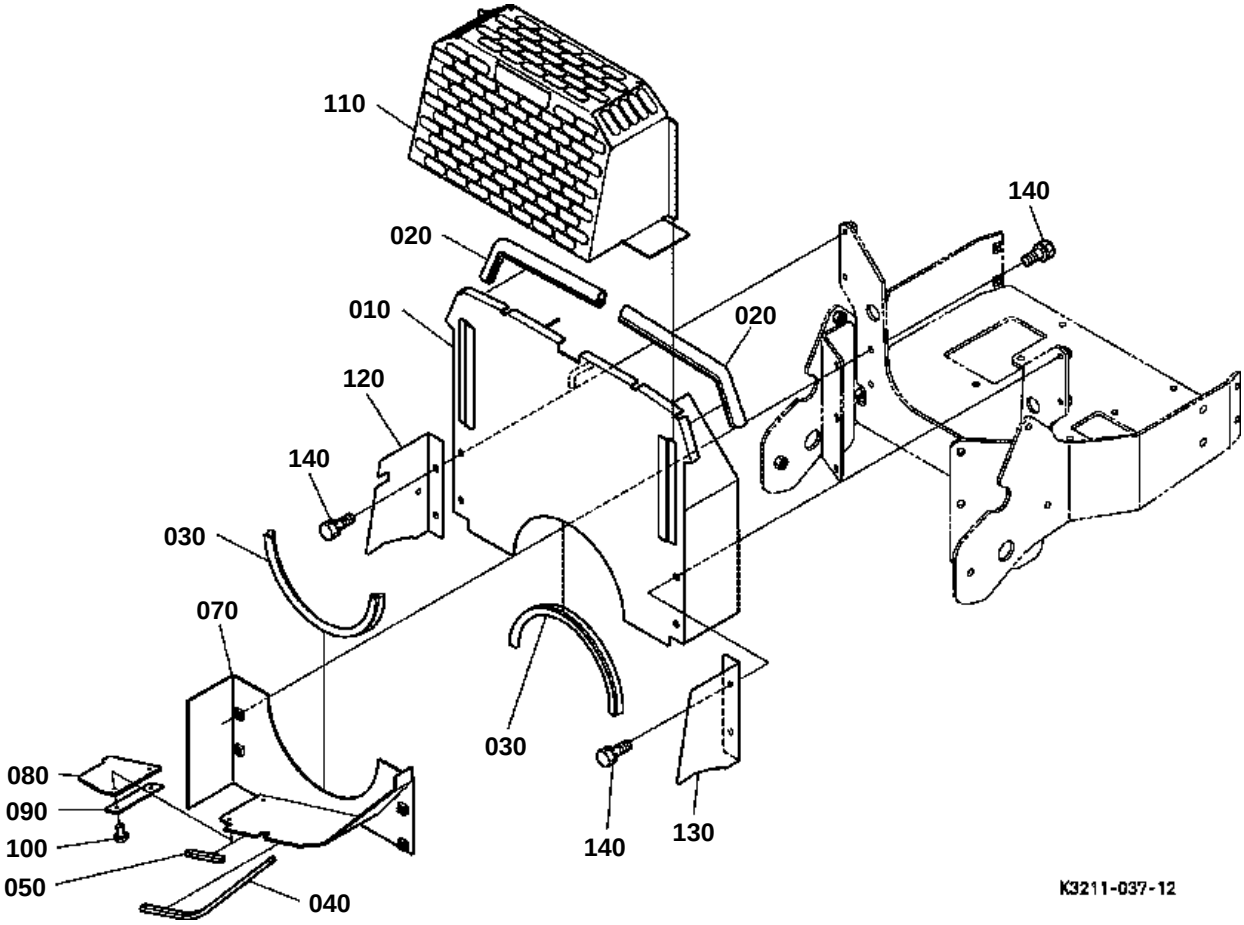
110
020
010
120
140
030
070
080
090
100
050
040
030
140
130
020
140
K3211-037-12

ENGINE SUPPORT

↔ Interchangeable; ≠ not interchangeable; ← new for old; → old for new

REF.No	Part No.	Description	Q'ty	S.No.	I/C	REMARKS	Weight (kgf)	Weight (lb)
010	K3211-95120	PLATE DUST KIT	1				0	0
020	K3211-84520	TRIM DUST	2				0	0
030	K3211-81550	TRIM ENGINE	2				0.04	0.088
040	K3211-84560	TRIM	1				0.028	0.0616
050	K3211-84570	TRIM	1				0.005	0.011
060	99999-99999	BLANK	0				0	0
070	K3211-81545	BASE SCREEN	1				1.3	2.86
080	K3211-81683	COVER DUST	1				0.2	0.44
090	K3211-81690	PLATE RIVET	1				0	0
100	K6072-63910	RIVET BLIND BLACK	2				0.002	0.0044
110	K3211-81560	NET SCREEN	1				0	0
120	K3211-81650	PLATE.SIDE RH	1				0	0
130	K3211-81660	PLATE SIDE LH	1				0	0
140	01754-50820	BOLT FLANGE	8				0.015	0.033

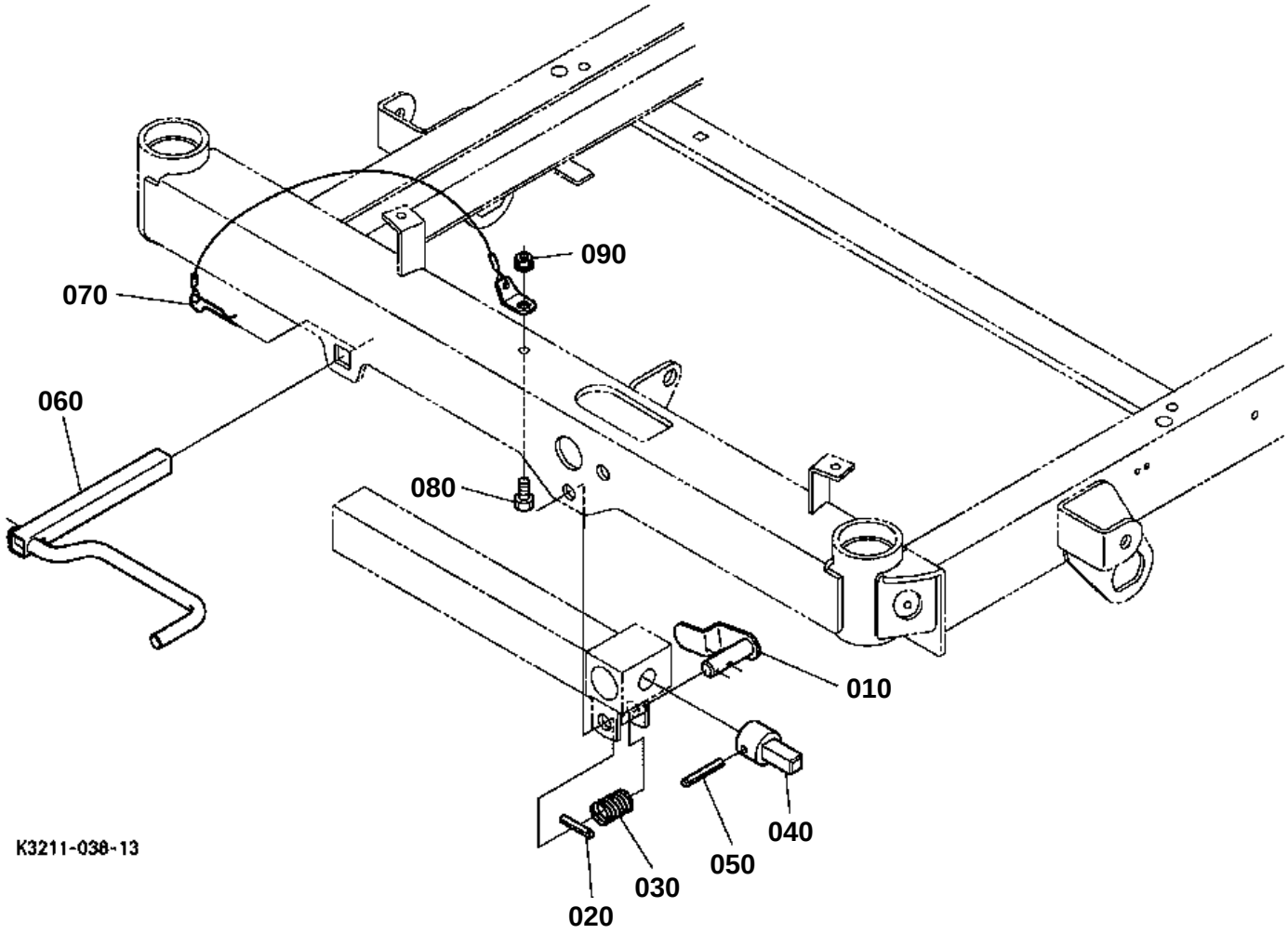
090
070
060
080
010
040
050
030
020
K3211-038-13

ADJUSTER HANDLE

↔ Interchangeable; ≠ not interchangeable; ← new for old; → old for new

REF.No	Part No.	Description	Q'ty	S.No.	I/C	REMARKS	Weight (kgf)	Weight (lb)
010	K3211-18862	PIN HINGE	1				0	0
020	05411-00536	PIN SPRING	1				0.003	0.0066
030	K5221-44550	SPRING HINGE PIN	1				0.009	0.0198
040	K3211-18880	BASE HANDLE	1				0	0
050	05411-00632	PIN SPRING	1				0.004	0.0088
060	K3211-18890	HANDLE	1				0	0
070	K3211-18720	ASSY PIN SET	1				0.017	0.0374
080	01123-50820	BOLT	1				0.011	0.0242
090	02751-50080	NUT FLANGE	1				0.006	0.0132

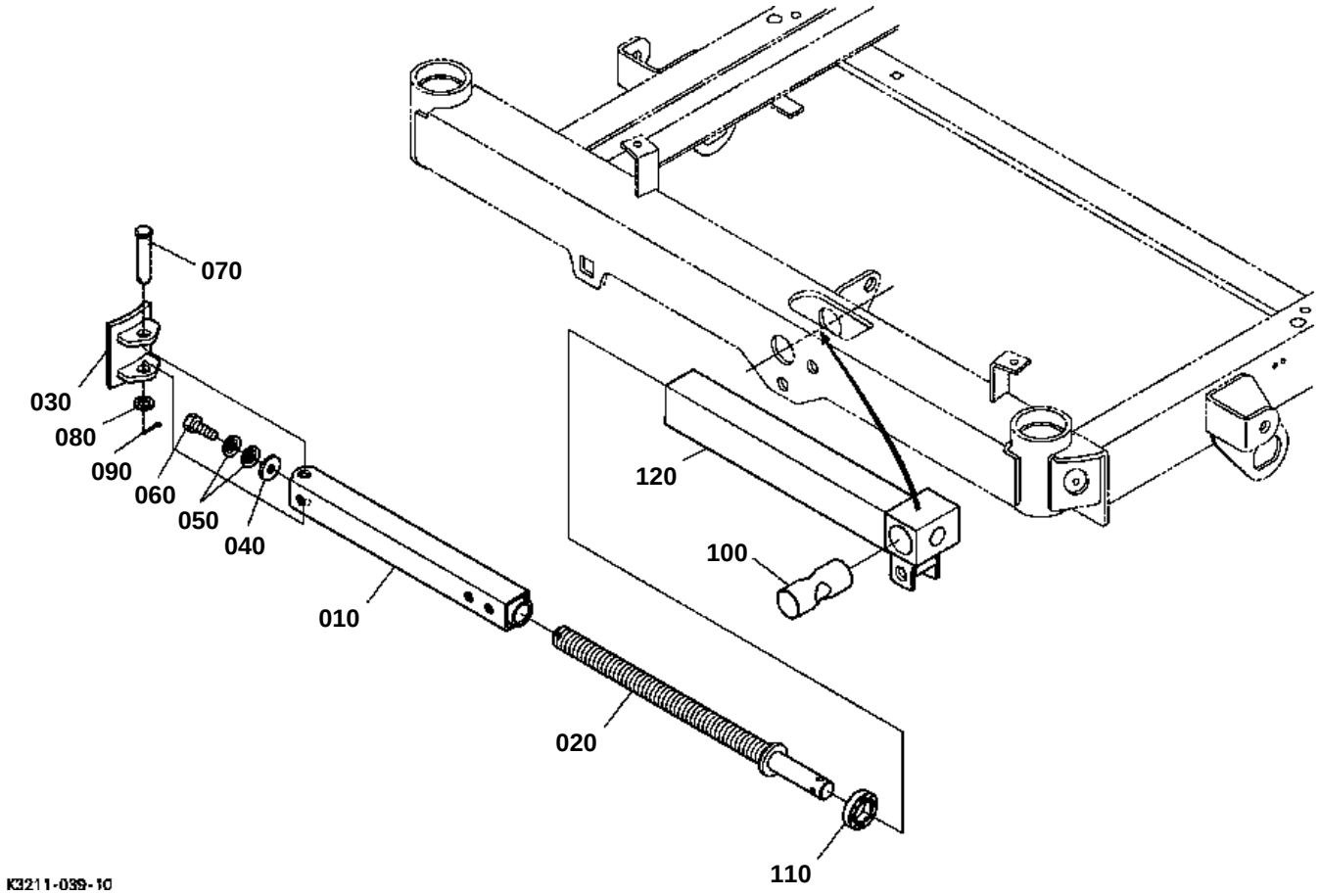
070
030
080
090
060
050
040
010
020
110
120
100
K3211-039-10

LIFT UP ADJUSTER

↔ Interchangeable; ≠ not interchangeable; ← new for old; → old for new

REF.No	Part No.	Description	Q'ty	S.No.	I/C	REMARKS	Weight (kgf)	Weight (lb)
010	K3211-18810	ADJUSTER	1				1.06	2.332
020	K3211-18840	SCREW ADJUSTER	1				0.9	1.98
030	K3211-18910	PLATE OUTRIGGER	1				0.3	0.66
040	5H601-58420	WASHER	1				0.01	0.022
050	37560-44880	SPRING	2				0.002	0.0044
060	5H215-61370	BOLT	1				0.01	0.022
070	05122-51260	PIN JOINT	1				0.055	0.121
080	04011-50120	WASHER PLAIN	1				0.005	0.011
090	05511-50425	PIN SPLIT	1				0.003	0.0066
100	K3211-18833	PIN ADJUSTER	1				0.55	1.21
110	08400-00007	BEARING THRUST BALL	1				0.036	0.0792
120	K3211-18854	COVER ADJUSTER	1				0	0

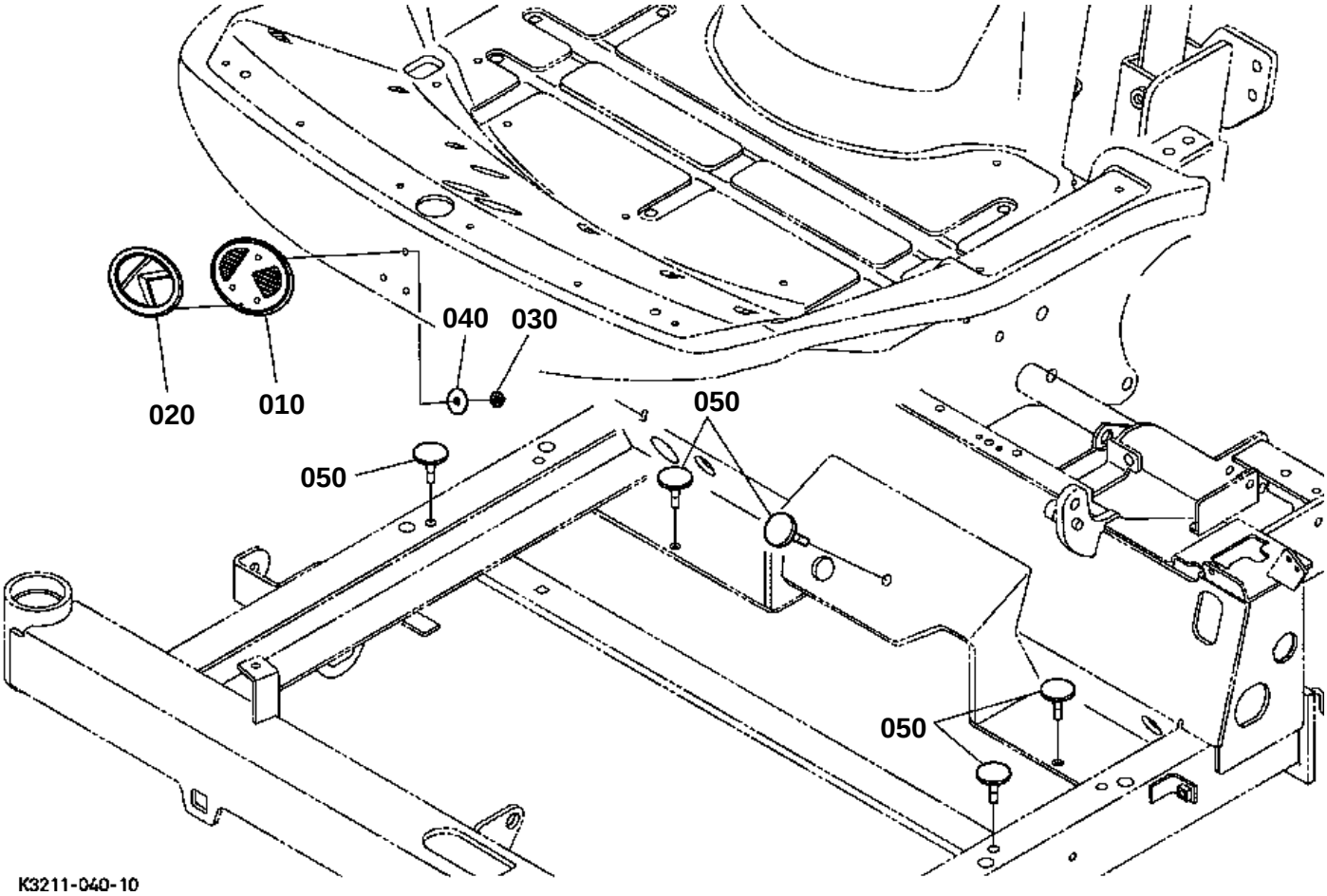
040
030
020
010
050
050
050
K3211-040-10

FRONT MASK

↔ Interchangeable; ≠ not interchangeable; ← new for old; → old for new

REF.No	Part No.	Description	Q'ty	S.No.	I/C	REMARKS	Weight (kgf)	Weight (lb)
010	K3211-53210	MASK FRONT	1				0.012	0.0264
020	K3511-49500	MARK SYMBOL	1				0.014	0.0308
030	K1122-89480	NUT PUSH	3				0.001	0.0022
040	K3111-53330	PLATE WASHER	3				0.001	0.0022
050	K3211-53190	CUSHION	7				0	0

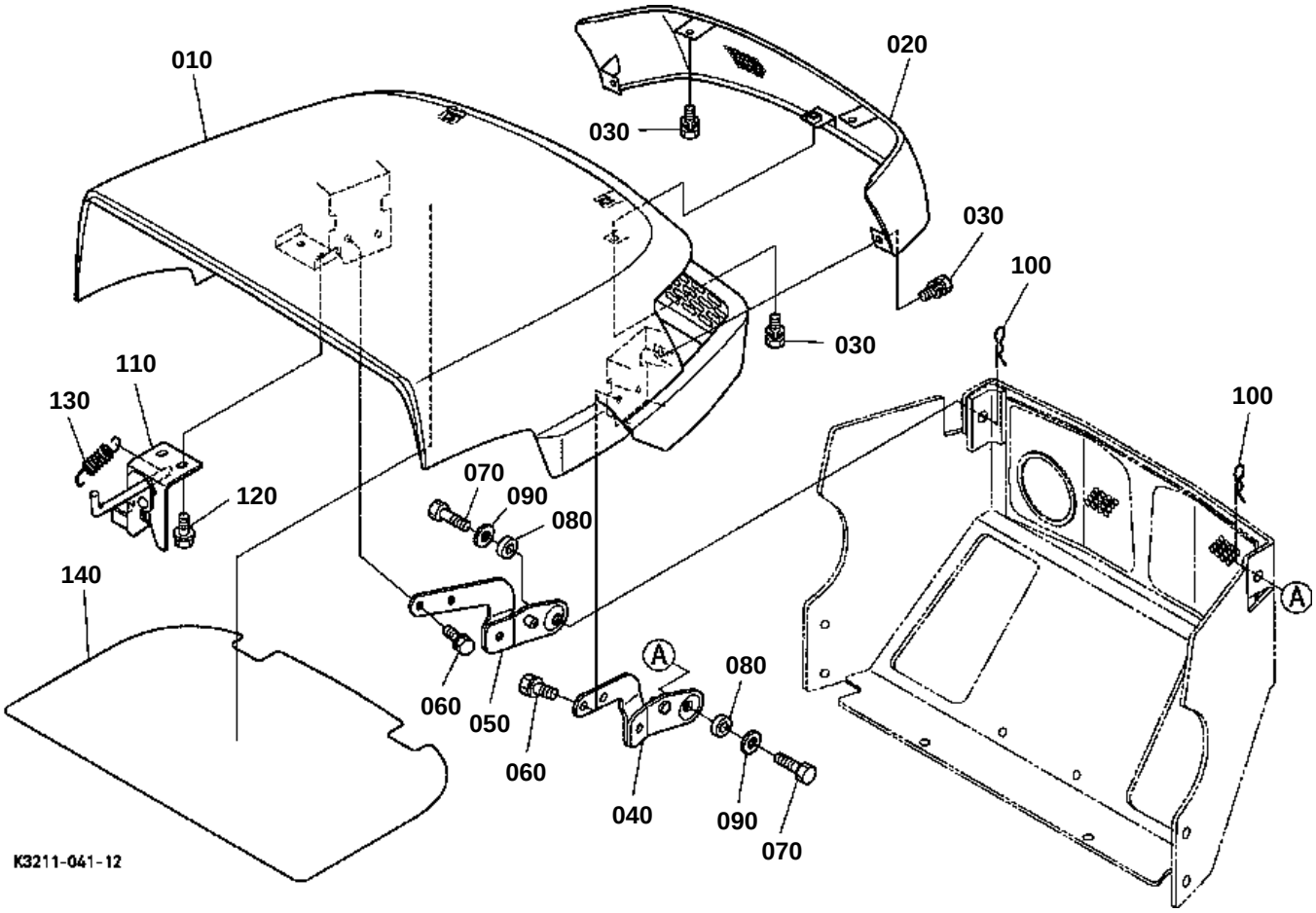
010
020
030
030
100
030
110
130
100
070
090
120
080
140
A
A
080
060
050
060
040
090
070
K3211-041-12

HOOD (BONNET)

↔ Interchangeable; ≠ not interchangeable; ← new for old; → old for new

REF.No	Part No.	Description	Q'ty	S.No.	I/C	REMARKS	Weight (kgf)	Weight (lb)
010	K3211-54010	BONNET COMP.	1				0	0
020	K3211-54120	GRILLE BONNET	1				0	0
030	01754-50610	BOLT FLANGE	5	<=10004			0.006	0.0132
030	01023-50612	BOLT	5	>=10005	≠		0.005	0.011
040	K3211-54130	STAY BONNET LH	1				0	0
050	K3211-54140	STAY BONNET RH	1				0	0
060	01123-50820	BOLT	4				0.011	0.0242
070	K3111-54260	BOLT	2				0.025	0.055
080	K3111-54240	CUSHION	2				0.005	0.011
090	04015-50100	WASHER PLAIN	2				0.016	0.0352
100	75599-56004	PIN SNAP	2				0.01	0.022
110	K3211-54210	LOCK BONNET	1	<=10004			0	0
110	K3211-54212	LOCK BONNET	1	>=10005	←		0.392	0.8624
120	01754-50610	BOLT FLANGE	2				0.006	0.0132
130	K3151-54310	SPRING	1				0.01	0.022
140	K3211-54260	CLOTH UPPER	1				0.1	0.22

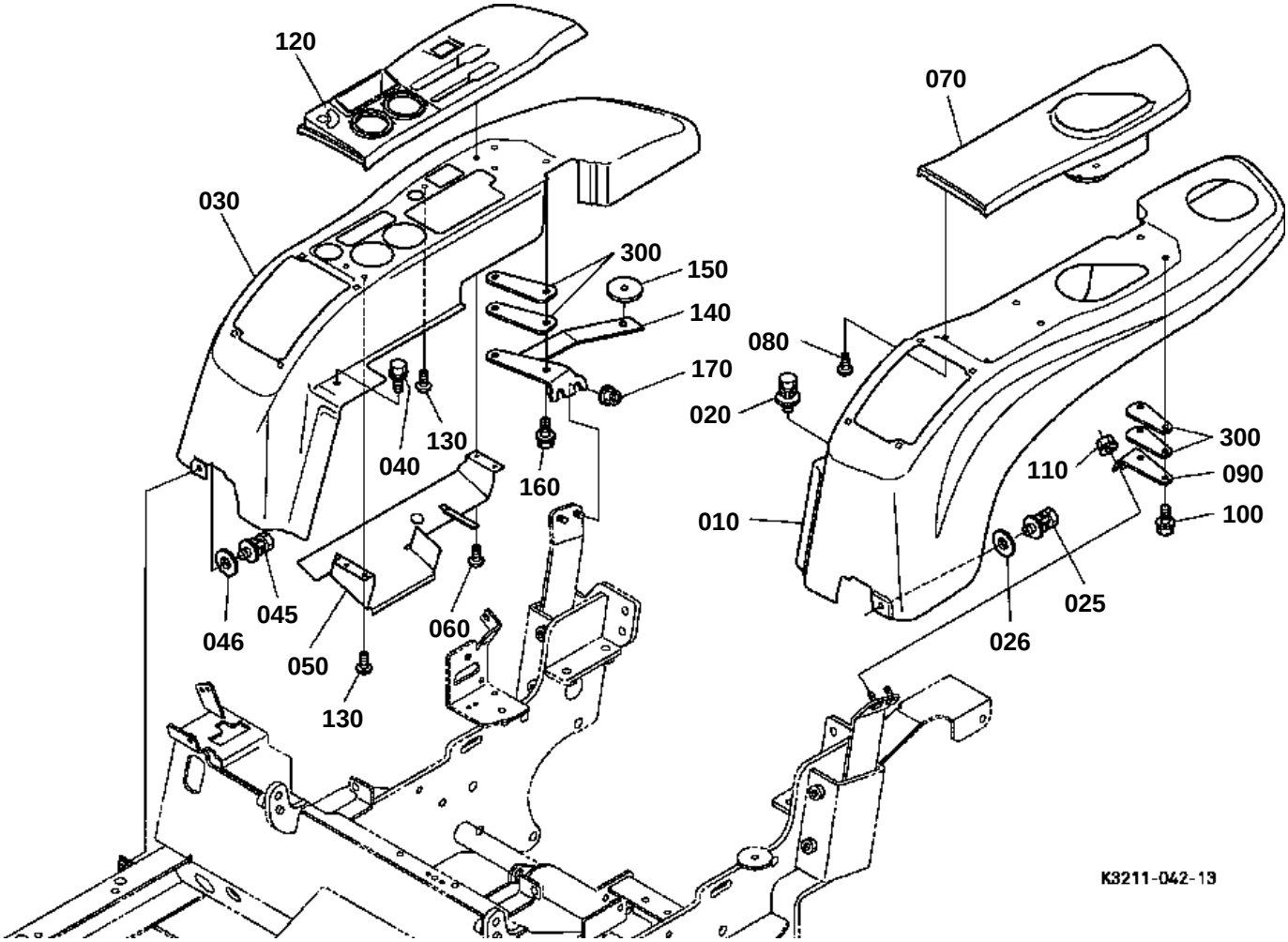
120
070
030
300
150
140
080
170
020
130
040
160
300
110
090
100
010
045
046
050
060
025
026
130
K3211-042-13

FENDER

↔ Interchangeable; ≠ not interchangeable; ← new for old; → old for new

REF.No	Part No.	Description	Q'ty	S.No.	I/C	REMARKS	Weight (kgf)	Weight (lb)
010	K3211-95160	KIT FENDER	1				0	0
020	01125-60820	BOLT	1				0.015	0.033
025	01125-51020	BOLT	1				0.005	0.011
026	K3211-55380	WASHER NYLON	1				0	0
030	K3211-55214	FENDER RH	1				5	11
040	01125-60820	BOLT	1				0.015	0.033
045	01125-51020	BOLT	1				0.005	0.011
046	K3211-55380	WASHER NYLON	1				0	0
050	K3211-55510	COVER ELECTRICAL	1				0	0
060	K3211-55440	SCREW TAPPING	2				0	0
070	K3211-55123	COVER FENDER LH	1				1	2.2
080	K3211-55440	SCREW TAPPING	4				0	0
090	K3211-55190	STAY FENDER REAR LH	1				0	0
100	01123-50820	BOLT	2				0.011	0.0242
110	02771-60100	NUT FLANGE	2				0.01	0.022
120	K3211-55223	COVER FENDER RH	1				0.5	1.1
130	K3211-55440	SCREW TAPPING	3				0	0
140	K3211-55290	STAY FENDER REAR RH	1				0	0
150	K3211-55280	CUSHION	1				0	0
160	01123-50820	BOLT	2				0.011	0.0242
170	02771-60100	NUT FLANGE	2				0.01	0.022
180	K3211-55134	GUIDE LEVER LH	1				0.32	0.704
190	K3211-55420	NUT	4				0.001	0.0022
200	K3211-55430	SCREW	4				0.005	0.011
210	K3211-55143	COVER LEVER-LH	1				0.2	0.44
220	K3211-55410	SPRING LEVER COVER	2				0.002	0.0044
230	K1122-55280	SCREW TAPPING	2				0.002	0.0044
240	K3211-55234	GUIDE LEVER RH	1				0.33	0.726
250	K3211-55420	NUT	4				0.001	0.0022
260	K3211-55430	SCREW	4				0.005	0.011
270	K3211-55243	COVER LEVER-RH	1				0.16	0.352
280	K3211-55410	SPRING LEVER COVER	2				0.002	0.0044
290	K1122-55280	SCREW TAPPING	2				0.002	0.0044
300	K3211-55350	PLATE FENDER STAY	4	>=10009			0.01	0.022

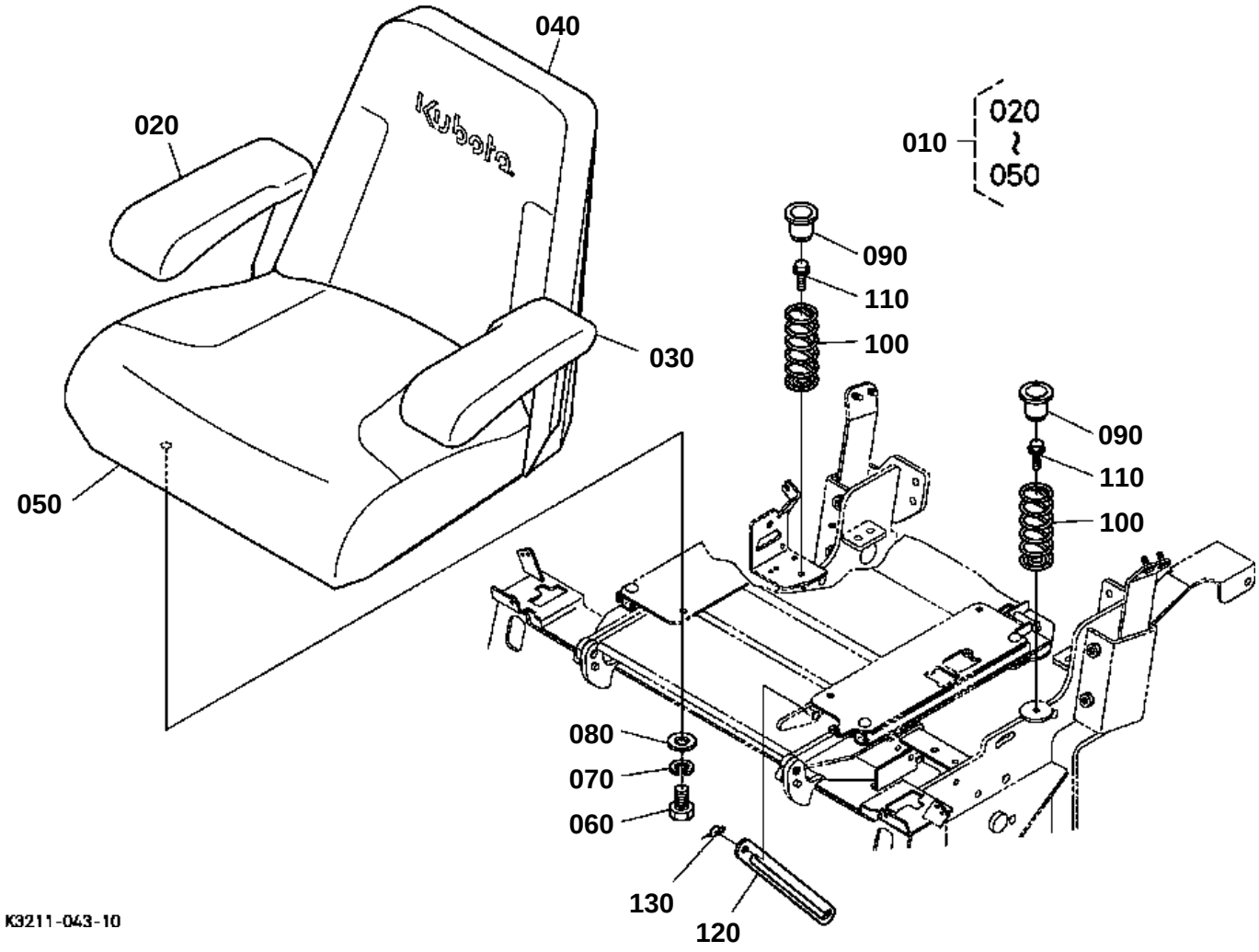
040
020
010
020
~
050
090
110
100
030
090
110
100
050
080
070
060
130
120
K3211-043-10

↔ Interchangeable; ≠ not interchangeable; ← new for old; → old for new

REF.No	Part No.	Description	Q'ty	S.No.	I/C	REMARKS	Weight (kgf)	Weight (lb)
010	K3211-56113	ASSY SEAT	1				17	37.4
020	K3111-56770	REST ARM RH	1				1.9	4.18
030	K3111-56780	REST ARM LH	1				1.87	4.114
040	K3211-56730	CUSHION REAR	1				0	0
050	K3211-56740	CUSHION LOWER	1				0	0
060	75599-01220	HEX.BOLT	4				0.012	0.0264
070	04512-60080	WASHER SPRING	4				0.002	0.0044
080	04013-60080	WASHER PLAIN	4				0.002	0.0044
090	K2561-56790	CAP SPRING	2				0.075	0.165
100	K3211-56250	SPRING SEAT	2				0	0
110	01754-50820	BOLT FLANGE	2				0.015	0.033
120	K3211-56440	PLATE SEAT OPEN	1				0	0
130	K1211-91110	RUE RING COTTER	1				0.001	0.0022

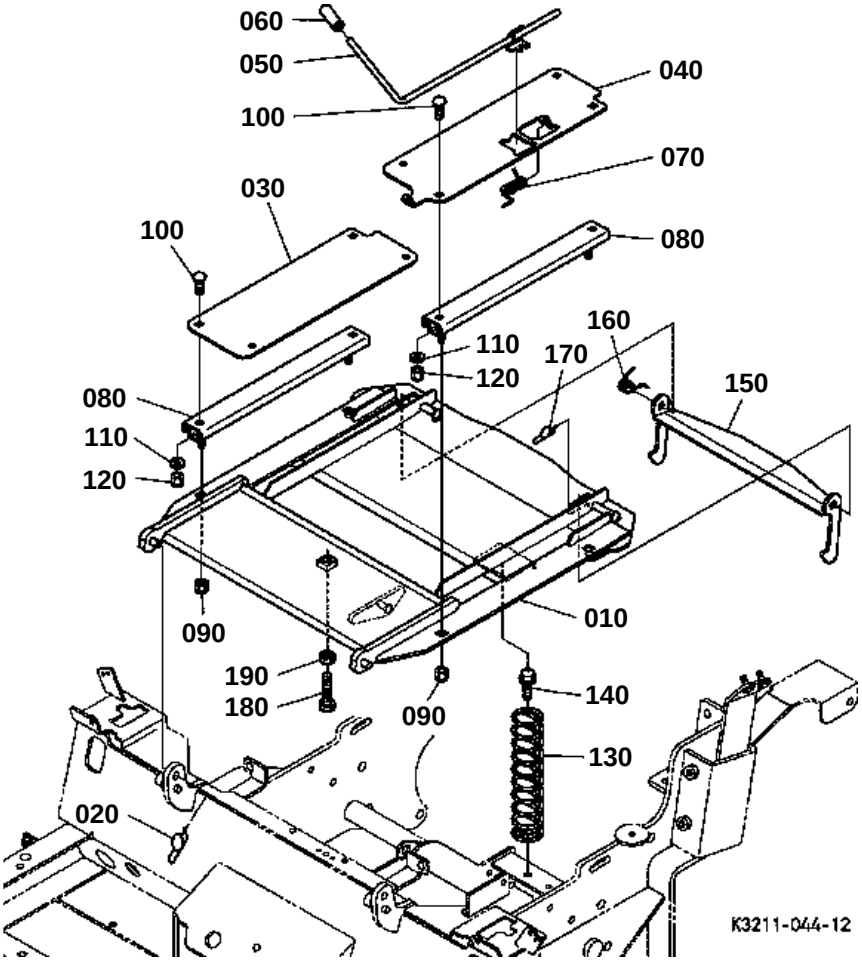
060
050
100
040
070
030
100
080
160
110
170
120
150
080
110
120
090
010
190
180
090
140
130
020
K3211-044-12

SEAT BASE

↔ Interchangeable; ≠ not interchangeable; ← new for old; → old for new

REF.No	Part No.	Description	Q'ty	S.No.	I/C	REMARKS	Weight (kgf)	Weight (lb)
010	K3211-56124	BASE SEAT	1				0	0
020	K1211-91130	RUE RING COTTER	1				0.01	0.022
030	K3211-56260	STAY SEAT RH	1				0	0
040	K3211-56270	STAY SEAT LH	1				0	0
050	K3211-56280	LEVER SEAT SLIDE	1				0.18	0.396
060	K1211-56140	COVER LEVER	1				0.008	0.0176
070	K3211-56170	SPRING LEVER	1				0	0
080	K2561-56710	RAIL SEAT	2				0.665	1.463
090	75599-31912	NUT LOCKING	4				0.006	0.0132
100	K1122-91320	BOLT SHORT SQU.NECK	4				0.01	0.022
110	04013-60080	WASHER PLAIN	4				0.002	0.0044
120	K5112-72840	NUT LOCK	4				0.005	0.011
130	K3211-56220	SPRING OPC	1				0	0
140	01754-50820	BOLT FLANGE	2				0.015	0.033
150	K3211-56372	HOOK SEAT	1				0.85	1.87
160	K3211-56380	SPRING SEAT HOOK	1				0	0
170	K1211-91130	RUE RING COTTER	1				0.01	0.022
180	01155-60835	BOLT	1				0.015	0.033
190	02114-50080	NUT	1				0.005	0.011

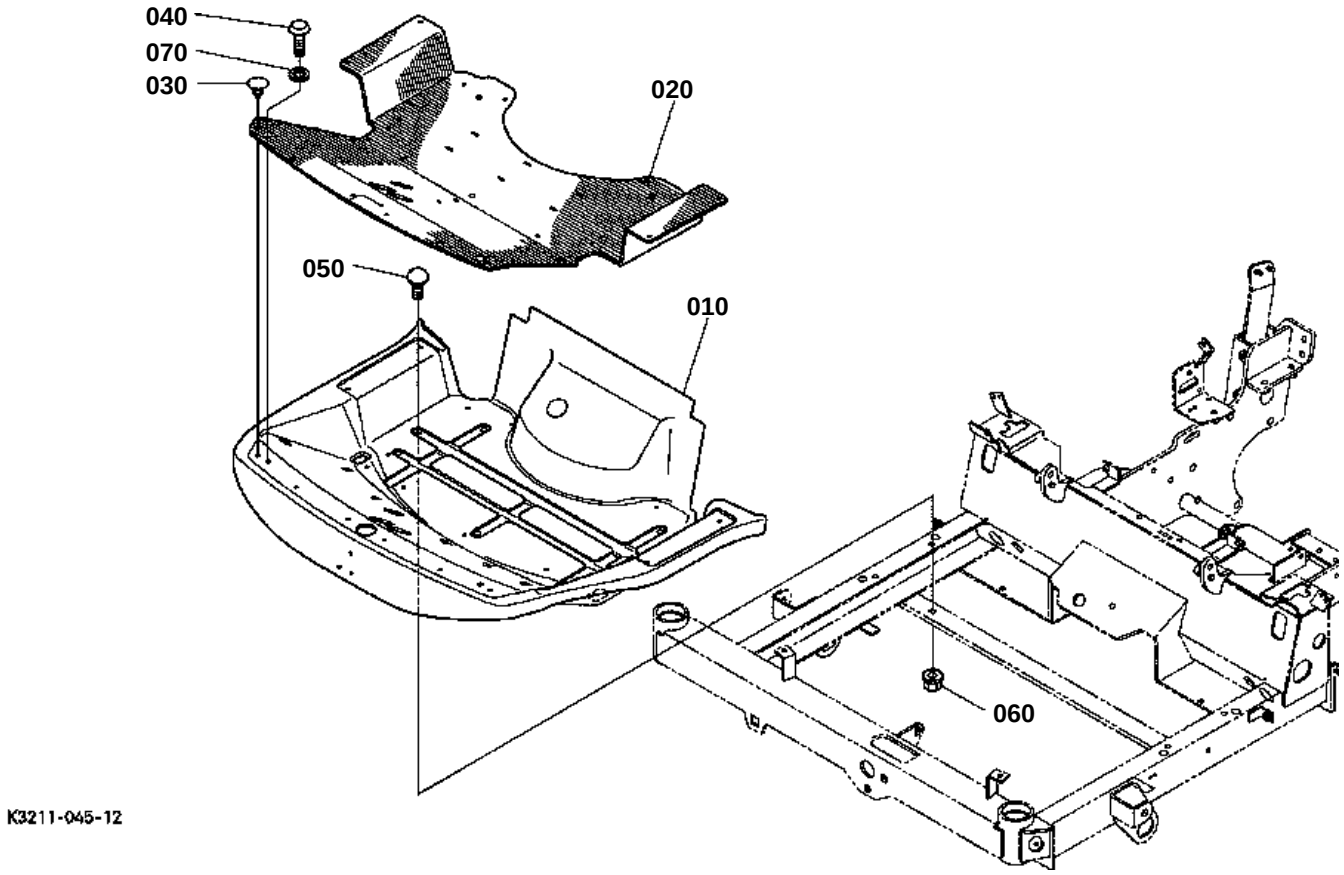
040
070
030
020
050
010
060
K3211-045-12

↔ Interchangeable; ≠ not interchangeable; ← new for old; → old for new

REF.No	Part No.	Description	Q'ty	S.No.	I/C	REMARKS	Weight (kgf)	Weight (lb)
010	K3211-95150	KIT STEP	1				12.23	26.906
020	K3211-53120	MAT STEP	1				0	0
030	K1211-84560	PUSH RIVET	28				0.002	0.0044
040	K1211-54360	SCREW BUTTON	2				0.01	0.022
050	01611-50820	BOLT CUP-SQ-NK	2				0.01	0.022
060	02751-50080	NUT FLANGE	2				0.006	0.0132
070	04512-60080	WASHER SPRING	2				0.002	0.0044

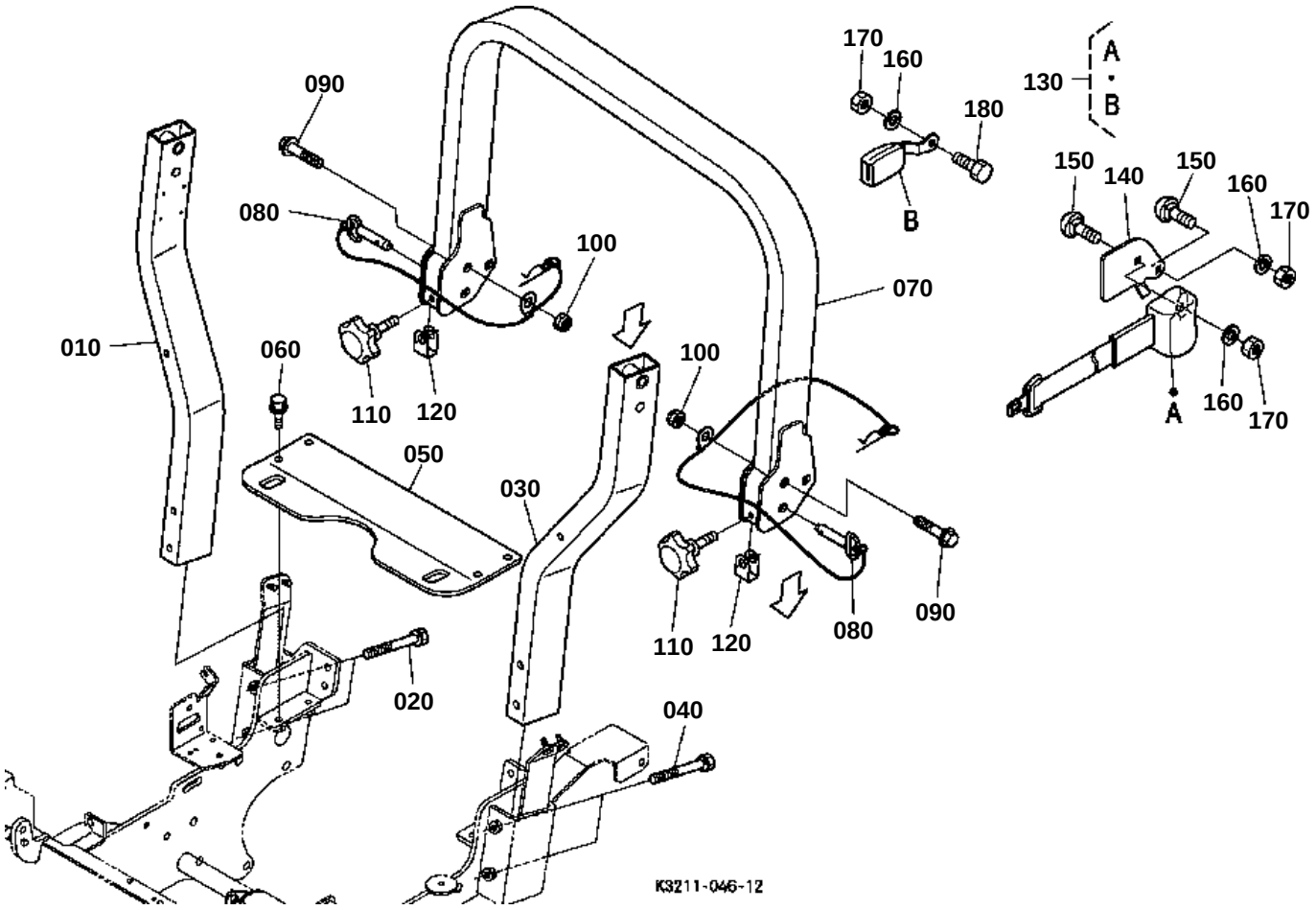
170
160
180
130
A
B
B
150
140
150
160
170
090
080
100
070
010
060
100
110
120
050
030
A
160
170
110
120
080
090
020
040
K3211-046-12

↔ Interchangeable; ≠ not interchangeable; ← new for old; → old for new

REF.No	Part No.	Description	Q'ty	S.No.	I/C	REMARKS	Weight (kgf)	Weight (lb)
010	99999-99999	TUBE ROPS RH	1			NOT SALE	0	0
020	01133-51000	BOLT	2				0.06	0.132
030	99999-99999	TUBE ROPS LH	1			NOT SALE	0	0
040	01133-51000	BOLT	2				0.06	0.132
050	K3211-95140	KIT BEAM	1				0	0
060	01133-51030	BOLT	4				0.025	0.055
070	99999-99999	FRAME UPPER	1			NOT SALE	0	0
080	K3211-82400	ASSY PIN SET	2				0	0
090	K3211-82540	BOLT	2				0	0
100	K3211-82560	NUT	2				0	0
110	53721-61533	CLAMP RAIL COVER	2				0.06	0.132
120	K2591-39560	BRACKET RETAINER	2				0.02	0.044
130	K3211-56850	ASSY BELT SEAT	1				0	0
140	K3211-82590	SUPPORT SEAT BELT	1				0	0
150	K3151-82520	BOLT	2				0.026	0.0572
160	04512-60100	WASHER SPRING	3				0.002	0.0044
170	K3151-82550	NUT(MX)	3				0.01	0.022
180	01133-51025	BOLT	1				0.023	0.0506

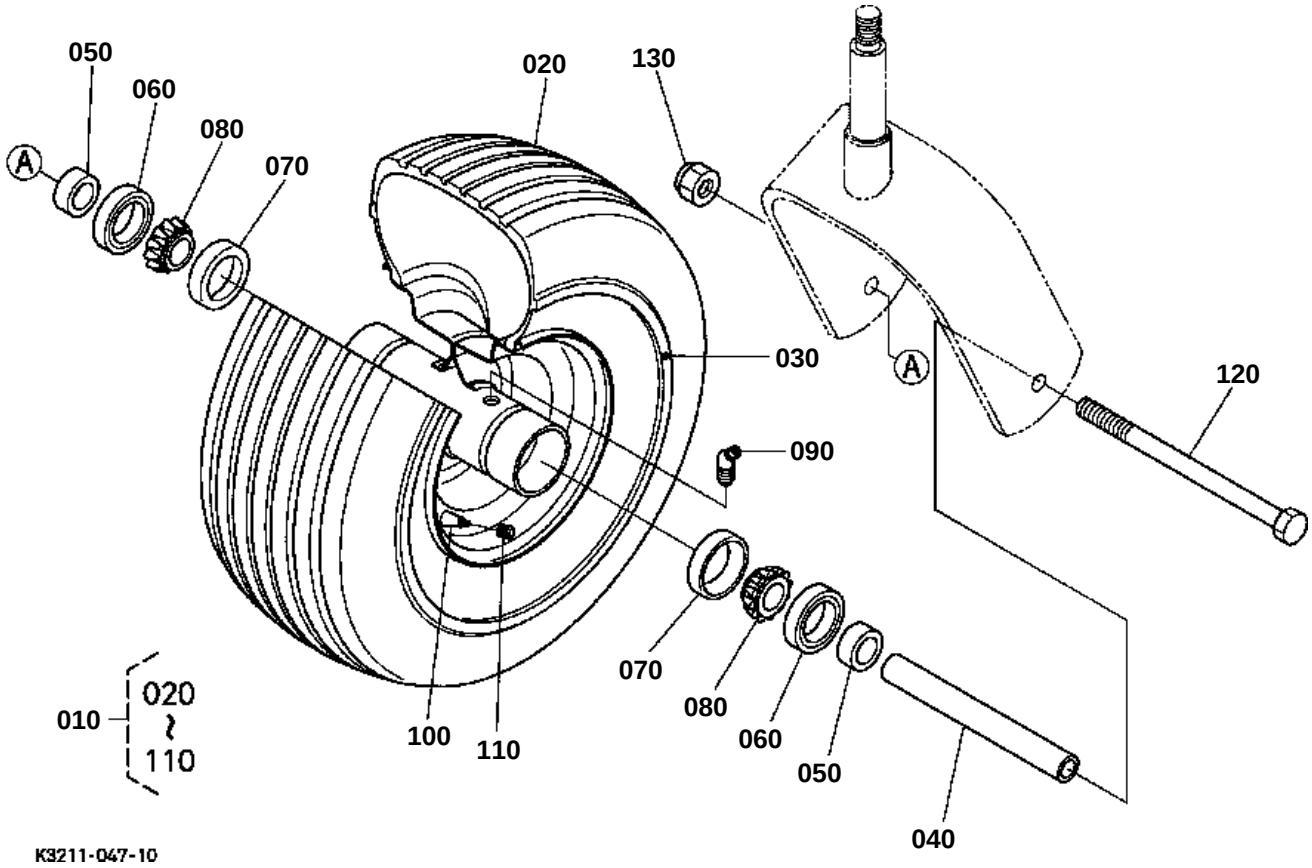
050
060
080
070
020
130
030
120
090
070
080
060
050
040
100
110
010
020
~
110
A
A
K3211-047-10

FRONT WHEEL

↔ Interchangeable; ≠ not interchangeable; ← new for old; → old for new

REF.No	Part No.	Description	Q'ty	S.No.	I/C	REMARKS	Weight (kgf)	Weight (lb)
010	K3211-18020	TIRE ASSY	2	<=10004			4.5	9.9
010	K3211-18022	TIRE ASSY	2	>=10005	≠		0	0
020	K3211-18030	TIRE	2				0	0
030	K3211-18040	WHEEL	2	<=10004			0	0
030	K3211-18042	WHEEL	2	>=10005	≠		0	0
040	K3211-18210	SLEEVE	2	<=10004			0	0
040	K3211-18212	SLEEVE	2	>=10005	≠		0.28	0.616
050	K3211-18220	SPACER	4				0	0
060	K3211-18230	OIL SEAL	4				0	0
070	K3211-18080	CUP TRB BEARING	4				0	0
080	K3211-18090	CONE TRB BEARING	4				0	0
090	K3211-18160	FITTING GREASE	2				0	0
100	K3211-18170	VALVE AIR	2				0	0
110	K3211-18180	CAP END	4				0	0
120	K3211-18010	BOLT HEX.	2				0	0
130	75599-31925	NUT LOCKING	2				0.02	0.044

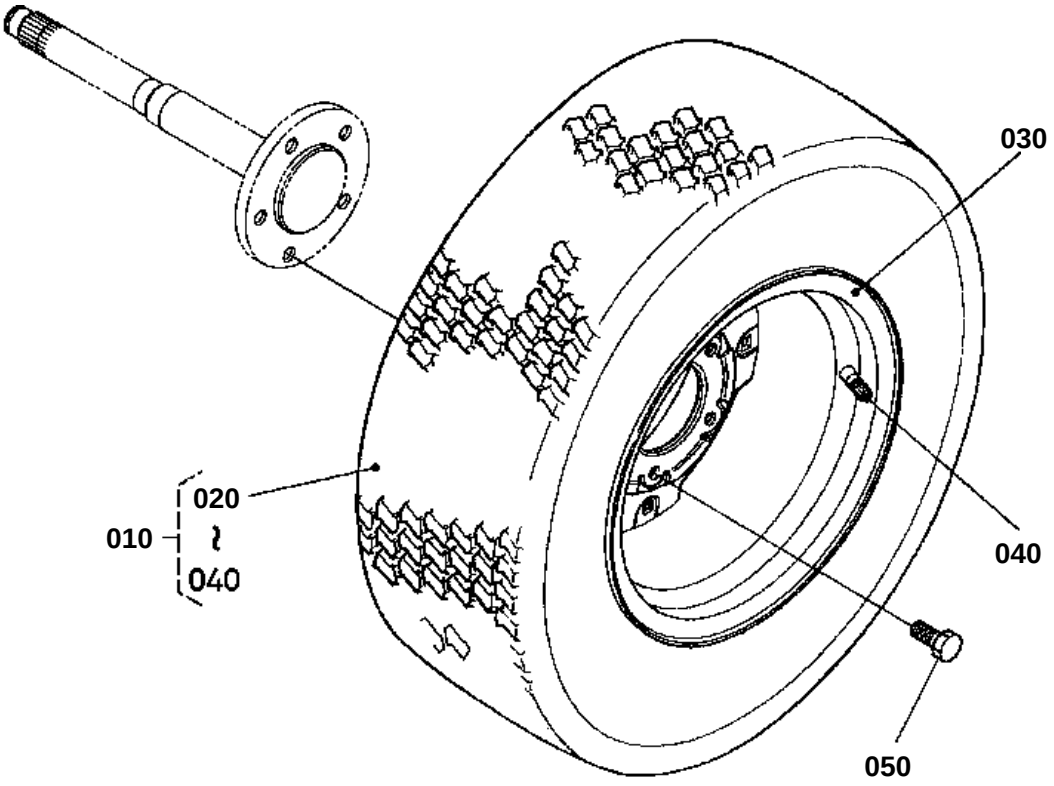

K3211-048-11

↔ Interchangeable; ≠ not interchangeable; ← new for old; → old for new

REF.No	Part No.	Description	Q'ty	S.No.	I/C	REMARKS	Weight (kgf)	Weight (lb)
010	K3511-99100	TIRE ASSY	2				15.2	33.44
020	K3511-99110	TIRE	2				6.5	14.3
030	66120-17180	WHEEL	2				4	8.8
040	66120-17190	VALVE TIRE	2				0.012	0.0264
050	K3211-17120	BOLT WHEEL	10				0.03	0.066

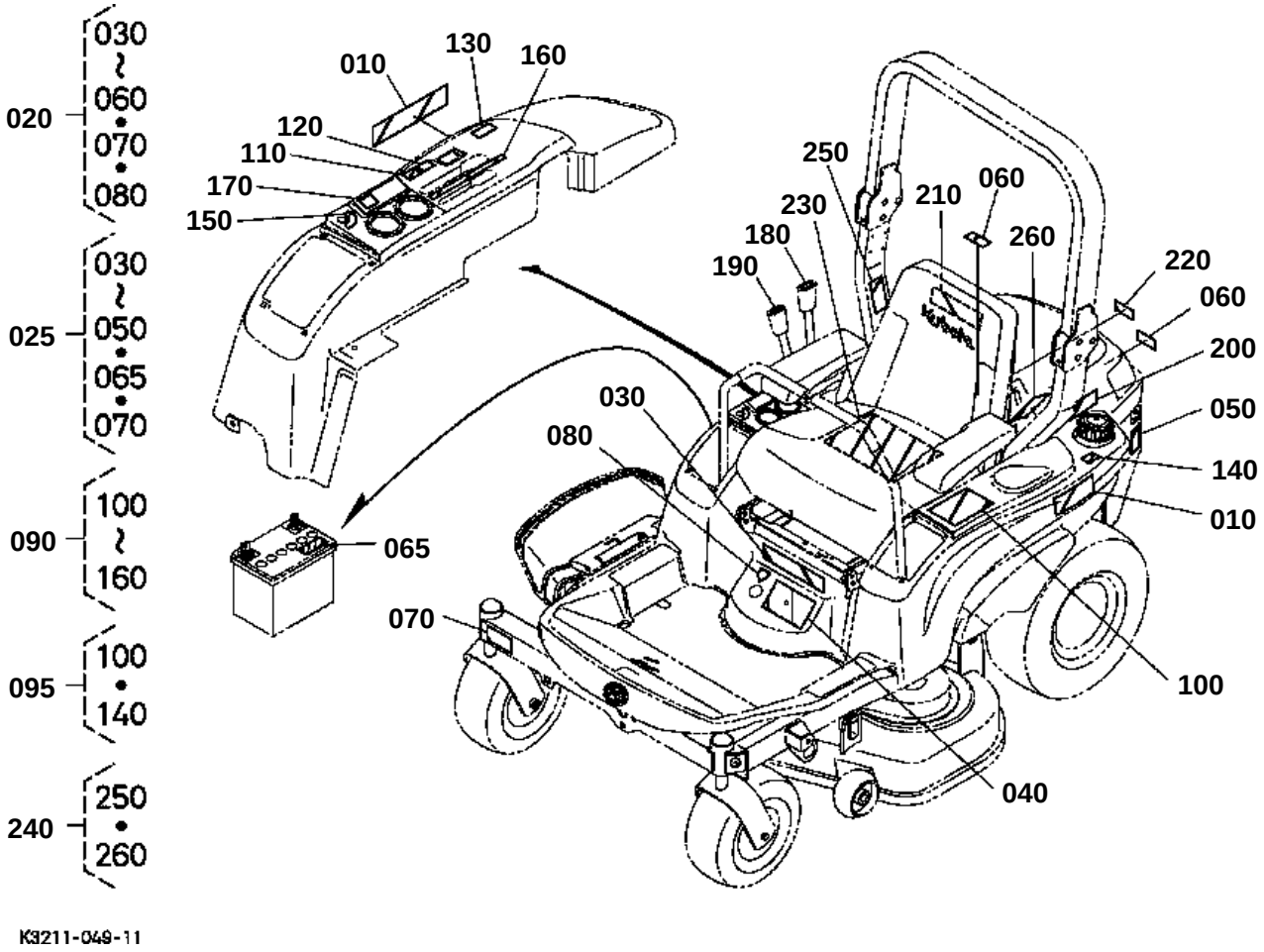
020
030
060
070
080
025
030
050
065
070
090
100
160
095
100
140
240
250
260
010
130
160
120
110
170
150
065
070
030
080
250
230
210
060
180
190
260
220
060
200
050
140
010
100
040
K3211-049-11

↔ Interchangeable; ≠ not interchangeable; ← new for old; → old for new

REF.No	Part No.	Description	Q'ty	S.No.	I/C	REMARKS	Weight (kgf)	Weight (lb)
010	K3211-65143	LABEL FENDER	2				0	0
020	K3211-65170	LABEL SET	1			ENGLISH	0.5	1.1
025	K3216-65170	LABEL SET	1			FRENCH	0	0
030	K3211-65810	LABEL WARNING	1			ENGLISH/ORDER BY REF.NO.020	0	0
030	K3216-65810	LABEL WARNING	1			FRENCH/ORDER BY REF.NO.025	0	0
040	K3211-65850	LABEL CAUTION	1			ENGLISH/ORDER BY REF.NO.020	0	0
040	K3216-65850	LABEL CAUTION	1			FRENCH/ORDER BY REF.NO.025	0	0
050	K3211-65830	LABEL STARTER	1			ENGLISH/ORDER BY REF.NO.020	0	0
050	K3216-65830	LABEL STARTER	1			FRENCH/ORDER BY REF.NO.025	0	0
060	K3211-65860	LABEL REVOLVE	2			ENGLISH/ORDER BY REF.NO.020	0	0
065	K3216-65960	LABEL WARNING	1			FRENCH/ORDER BY REF.NO.025	0	0
070	K3216-65920	LABEL MAINT.LIFT	1			FRENCH/ORDER BY REF.NO.025	0	0
080	K3211-65930	LABEL ALLOW	1			ORDER BY REF.NO.020	0	0
090	K3211-65182	LABEL SET	1			ENGLISH	0.03	0.066
095	K3216-65182	LABEL SET	1			FRENCH	0	0
100	K3211-65160	LABEL	1			ENGLISH/ORDER BY REF.NO.090	0	0
100	K3216-65160	LABEL	1			FRENCH/ORDER BY REF.NO.095	0	0
110	K3211-65550	LABEL PTO	1			ORDER BY REF.NO.090	0	0
120	K3211-65570	LABEL PTO	1			ORDER BY REF.NO.090	0	0
130	K3211-65590	LABEL PTO	1			ORDER BY REF.NO.090	0	0
140	K3211-65620	LABEL FUEL	1			ENGLISH/ORDER BY REF.NO.090	0	0
140	K3216-65620	LABEL FUEL	1			FRENCH/ORDER BY REF.NO.095	0	0
150	K3211-65650	LABEL KEY SWITCH	1			ORDER BY REF.NO.090	0	0
160	K3211-65670	LABEL ACCEL.	1			ORDER BY REF.NO.090	0	0
170	K3211-65210	LABEL INDICATOR	1				0.2	0.44
180	K3111-46260	MARK GRIP PTO	1				0.001	0.0022
190	K1122-65240	MARK GRIP ACCEL	1				0.001	0.0022
200	K3211-65120	LABEL BONNET	2				0.005	0.011
210	7C605-56470	MARK KUBOTA	1				0.005	0.011
220	K3211-65320	LABEL HOT CAUTION	1			ENGLISH	0	0
220	K3216-65320	LABEL HOT CAUTION	1			FRENCH	0	0
230	K3211-65510	LABEL MAINTENANCE	1			ENGLISH	0	0
230	K3216-65510	LABEL MAINTENANCE	1			FRENCH	0	0
240	K3211-65802	LABEL ROPS WARNING	1			ENGLISH	0.016	0.0352
240	K3216-65800	LABEL ROPS WARNING	1			FRENCH	0	0
250	K3211-65630	LABEL ROPS	1			ENGLISH/ORDER BY REF.NO.240	0	0
250	K3216-65630	LABEL	1			FRENCH/ORDER BY REF.NO.240	0	0
260	K3211-65640	LABEL ROPS	1			ENGLISH/ORDER BY REF.NO.240	0	0
260	K3216-65640	LABEL	1			FRENCH/ORDER BY REF.NO.240	0	0

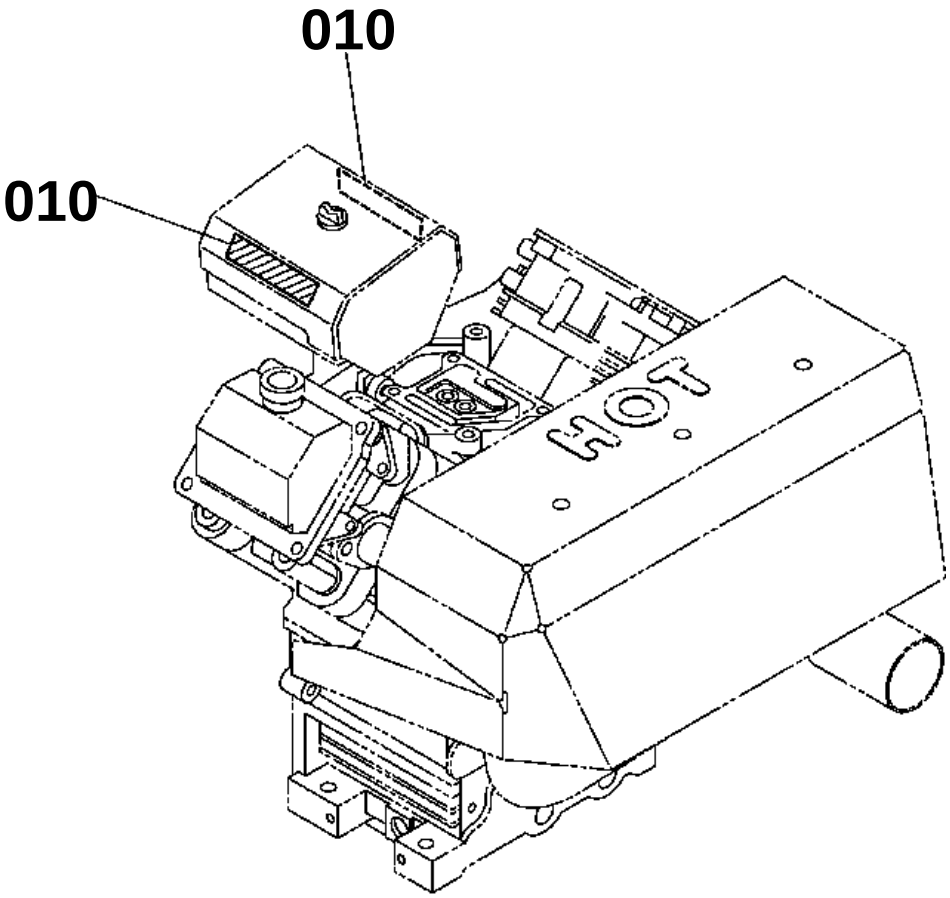

K3211-050-10

↔ Interchangeable; ≠ not interchangeable; ← new for old; → old for new

REF.No	Part No.	Description	Q'ty	S.No.	I/C	REMARKS	Weight (kgf)	Weight (lb)
010	K3211-65910	LABEL ENGINE	2				0	0

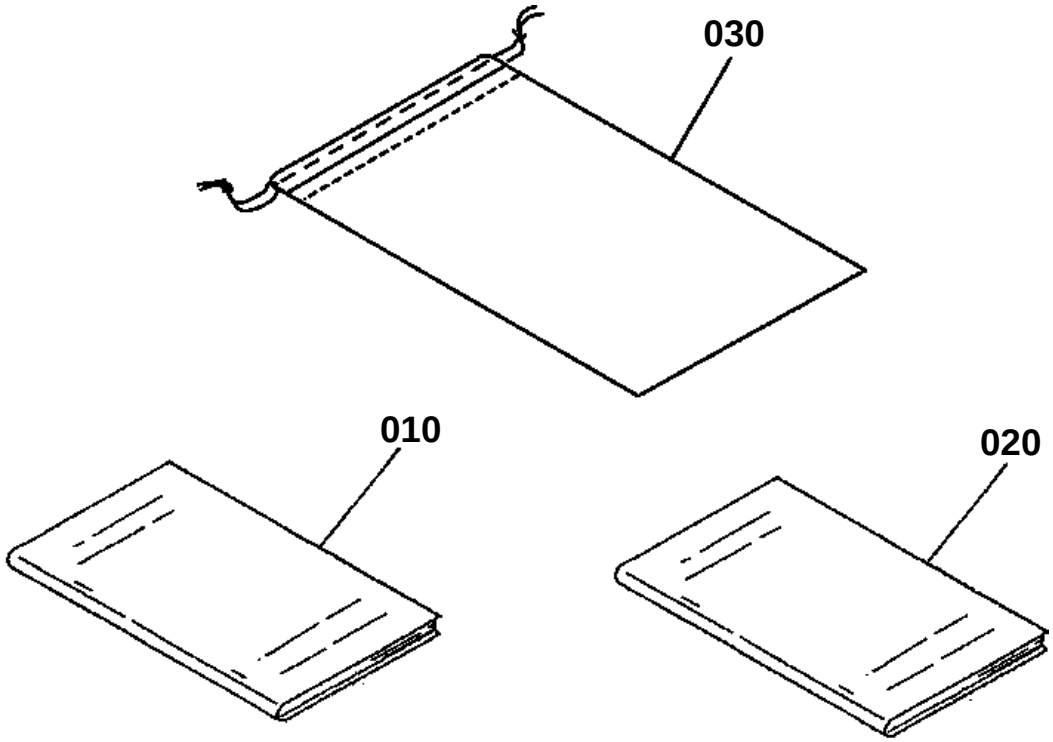

K3211-Q52-11

↔ Interchangeable; ≠ not interchangeable; ← new for old; → old for new

REF.No	Part No.	Description	Q'ty	S.No.	I/C	REMARKS	Weight (kgf)	Weight (lb)
010	K3211-71210	MANUAL OWNER	1			ENGLISH	0	0
010	K3216-71210	MANUAL OWNER	1			FRENCH	0	0
020	99999-99999	MANUAL ASSEMBLY	1			FOR DEALER	0	0
030	K1122-73220	BAG VINYL	1	>=10009			0.015	0.033